Land Use Planning Division
1600 SE 190th Ave, Ste 116
Portland OR 97233
Ph: 503-988-3043 Fax: 503-988-3389
multco.us/landuse

NSA ROAD/UTILITY EXPEDITED APPLICATION

Paid:	8-Mar-22	
Method:	EFT	
Fees:	EXP	$456.00
	NF	$241.00
Total:		$697.00

PROPERTY

Nearest Address Latourell Rd Bridge Nearest Cross Street Historic Columbia River Highway

PROPOSED DEVELOPMENT (check all that apply)

❑ **Road Closure Gates** Length _____ Height _____ ft

❑ **New traffic detection devices, vehicle weighting devices, or signal boxes. (Does not include signs)** Size _____ *(120 sf max)* Height _____ ft *(12 ft max)*

❑ **New guardrails, guardrail ends, wire strand or woven wire access control fences.**

❑ **Air, weather, water or similar research & monitoring facility attached to existing structure** Size _____ *(120 sf max)* Height _____ ft *(12 ft max)*

❑ **New underground utility facility located inside road, utility, or railroad rights-of-way or previously disturbed easement.** Ditch Width _____ (*36 in max*)
Amount of excavation for non-linear facilities _____ *(20 cubic yds. Max)*

❑ **Trail Reconstruction. May include up to 1,000 foot reroute.**

❑ **Decommission non-paved road:** Includes ripping road surface, barriers, revegetation

❑ **Develop new or modify existing aboveground/overhead utility facilities**
Size _____ *(120 sf max)* Height _____ *(12 ft. max)*

❑ **Replace existing aboveground/overhead utility facilities in the same location and no more than 15% larger than the existing facilities.**

❑ **New antennas/support structures necessary for public service on existing wireless communication poles and towers if size is minimum necessary to provide the service.**

❑ **Outdoor lights** ☒ **Other:** Install new stormwater manhole within existing roadway and right-of-way.

APPLICANT

Name Emily Miletich, Multnomah County Phone 503-544-5984
Mailing Address 1403 SE Water Ave. Fax _____
City Portland State OR Zipcode 97214 E-mail emily.miletich@multco.us

OWNER (if work is to occur on private property)

Name All work is within public right of way Phone _____
Address _____ City _____ State ___ Zipcode _____

I authorize the applicant to make this application.

Emily Miletich Digitally signed by Emily Miletich DN: C=US, E=emily.miletich@multco.us, O=Transportation Division, OU=Bridges, CN=Emily Miletich Date: 2022.03.04 12:32:32-08'00'

Property Owner Signature

NOTE: By signing this form, the property owner or property owner's agent is granting permission for Planning Staff to conduct site inspections on the property.

☐ If no owner signature above, a letter of authorization from the owner is required.

For Staff Use

CASE NUMBER
T2-2022-15580

State ID #
1N5E29BD -03300

Alt Acct. #
R475801910

DATE SUBMITTED
3/8/2022

ZONING
GSR

MCC CITATION (For Qualifying Use)
38.1010(A)(17)

Related Case No
T2-2020-13869

Open UR/ZV

By: LE

Work in Road Right-of-Way

Type:
❑ State
❑ County
Permit#

Instructions for applicants:

The checklist below asks you to confirm facts or conditions related to the subject property and your proposal. The numbered paragraphs in bold represent code requirements or criteria for development in the National Scenic Area (NSA). Those criteria are addressed when you check a box below each numbered paragraph. By checking a box, you are confirming that the corresponding statement applies to your project. Staff concurrence is indicated by initials in the boxes along the right column of this form. Please ensure that you check a box under every numbered paragraph or staff will not be able to process this application under the Expedited Review Process.

Scenic Resources

1. Any application involving Interstate 84 must first be reviewed for consistency with the I-84 Corridor Strategy by the ODOT lead I-84 Strategy Team.

Staff initial: LE

☒ This application does not involve Interstate 84. *The I-84 Corridor Strategy does not apply.*

☐ This application does involve Interstate 84. The proposal has been reviewed for consistency with the I-84 Corridor Strategy by the I-84 Strategy Team. *The proposal is consistent with the I-84 Corridor Strategy.*

Attach agency confirmation

2. The colors of structures topographically visible from key viewing areas shall be dark earth-tones found at the specific site or the surrounding landscape. The specific colors or list of acceptable colors shall be included as a condition of approval. This guideline shall not apply to additions, which may match the color of existing buildings.

Staff initial: LE

See NSA Handout #4: Expedited Development Review Process, for list of KVAs

☐ The application is for an addition to or modification of an existing structure, or placement of a new structure on land that is not topographically visible from a Key Viewing Area (KVA). The KVA(s) the structure is visible from are _____. The attached site plan illustrates how the structure is topographically screened from these KVA(s). *This criterion has been met.*

Note to applicant: Show on the site plan the location of the terrain feature or landform that screens the structure with arrows identifying the vantage point from which the site is viewed from the KVA(s).

Attach plan

☒ The application is for an addition to or modification of an existing structure, or placement of a new structure on land that is topographically visible from one or more key viewing areas. As shown in the attached color chip and site photograph, the above ground portion of the structure will be dark earth tones that are found at the site or surrounding landscape. *This criterion has been met.*

Attach color chip(s) & photo(s) of structure & surrounding landscape

3. Structures topographically visible from key viewing areas shall use low or non-reflective building materials.

Staff initial: LE

☐ The application does not involve a structure that is topographically visible from a key viewing area. *This criterion has been met.*

☒ The application includes structure(s) that are topographically visible from one or more key viewing areas. As shown in the attached samples, the above ground portions of the proposed structure(s) will use low or non-reflective building materials. *This criterion has been met.*

Attach building material samples

4. **Outdoor lights shall be directed downward and sited, hooded, and shielded such that they are not highly visible from key viewing areas. Shielding and hooding materials shall be composed of non-reflective, opaque materials.**

Staff initial: LE

☒ The application does not include outdoor lights. *This criterion is not applicable.*

☐ The application includes outdoor lights. As shown in the attached specification sheet, the proposed lights will be hooded and shielded and are composed of non-reflective, opaque materials. A site plan and/or elevation drawings shows the location of the lighting. Based on these drawings the lighting will not be highly visible from key viewing areas. *This criterion has been met.*

Attach spec sheet here

5. **Structures within ½-mile of a key viewing area and topographically visible from the key viewing area shall be sited, screened and/or designed to achieve the applicable scenic standard (e.g., visual subordinance, not visually evident).**

Staff initial: LE

☒ The application does not involve a structure that is within ½-mile of and topographically visible from a key viewing area. *This criterion is not applicable.*

☐ The application includes structure(s) that are within ½-mile of and topographically visible from (a) key viewing area(s). As shown on the attached site plan, and exterior architectural elevations or rendered photo, the proposed structure(s) will be sited, screened, and/or designed so that it achieves the standard of: ☐ visual subordinance, or ☐ not visually evident

Attach elevations or photo of structure

Explain how standard is achieved.

See NSA Handout #5: Designing for Approval

This criterion has been met.

Recreation Resources

6. The development shall not detract from the use and enjoyment of established recreation sites on adjacent parcels.

Staff initial: LE

☒ The attached site plan labels the uses on adjacent parcels. There is no established recreation site on an adjacent parcel. *This criterion is not applicable.*

Label adjacent uses on attached site plan

☐ The attached site plan labels show that the property is adjacent to at least one established recreation site, but does not detract from the use and enjoyment of the site. The proposed development will not generate noise, dust, or odors at levels significant enough to impact the use. Also, the site plan shows that the proposed development would not interfere with access to the adjacent recreation site(s). *This criterion has been met.*

Cultural Resources

7. The expedited development review process shall only be used to review proposed development that does not require a reconnaissance survey or historic survey.

Staff initial: LE

Note to applicant: If an Indian tribe sends a letter in response to the application indicating that the proposal affects a treaty right or cultural resource, then the application can not be reviewed using the expedited development review process.

Reconnaissance Survey
Proposed development does not require a reconnaissance survey if it meets any of the following (check at least one that applies):

☐ Is limited to the modification, expansion, replacement, or reconstruction of existing buildings and structures.

☐ Will not disturb the ground (e.g. new overhead wires on existing poles)

☐ Occurs on a site that was previously disturbed by human activities where the depth and extent of the grading does not exceed prior ground disturbance.

Show area and type of disturbance on plan

☐ Involves minor ground disturbance, as defined by depth and extent (e.g. fence construction, installation of new meter, etc.)

Width _____ x Length _____ x Depth _____

Note to applicant: The project will not qualify for expedited review if the Gorge Commission disagrees that the activity results in minor disturbance.

☒ Occurs on a site that has been adequately surveyed in the past, or has been identified by the Gorge Commission, USFS Archaeologist, or private archaeologist as having a low probability of containing cultural resources. *This criterion has been met.*

Attach survey

Historic Survey

A historic survey is not required for the following activities (check at least one):

☒ There are no structures 50 years old or older on the property.

☐ There is/are structures 50 years old or older; however, the application does not alter the structure(s), nor does it compromise features of the surrounding area that help define the historic character of the structure(s). *This criterion has been met.*

Natural Resources

8. The development is outside buffer zones for wetlands, streams, rivers, ponds, and lakes. This guideline shall not apply to development located inside road, utility or railroad rights-of-way or easements that have been previously disturbed and regularly maintained.

Staff initial: LE

Show rights-of-way or easement boundary on site plan

☒ The proposal is for development located inside road, utility or railroad rights-of-way or easements that have been previously disturbed and regularly maintained. *This criterion is not applicable.*

☐ As shown on the attached site plan, proposed development is outside buffer zones for wetlands, streams, rivers, ponds, and lakes. *The criterion has been met.*

9. The development will not adversely impact sensitive wildlife or plant species or is at least 1,000 feet from known sensitive wildlife areas or sites (excluding sensitive aquatic species, deer winter range, and turkey habitat) and known sensitive plants. This guideline shall not apply to development that does not disturb the ground or is located inside road, utility or railroad rights-of-way or easements that have been previously disturbed and regularly maintained.

Staff initial: LE

☐ As shown on the attached site plan and confirmed by planning staff, the proposed development is over 1,000 feet from known sensitive wildlife areas or sites (excluding sensitive aquatic species, deer winter range, and turkey habitat) and known sensitive plants. *This criterion has been met.*

☒ The proposed development does not disturb the ground or is inside road, utility or railroad rights-of-way or easements or other areas that have been previously disturbed and regularly maintained. *This criterion is not applicable.*

☐ Although proposed development is within 1,000 feet of a known sensitive wildlife area or site, the Oregon Department of Fish and Wildlife (for GMA lands) or U.S. Forest Service (SMA lands) has determined that the area or site is not active, that development will not compromise the integrity of the wildlife area or site, or that development will not occur during a time of year that the wildlife species are sensitive to disturbance.

See land use staff for agency contacts

Attach agency confirmation

☐ Although proposed development is within 1,000 feet of known sensitive plants, a representative of the Oregon Natural Heritage Program or an expert in botany or plant ecology has determined that development will not occur within 200 feet of a sensitive plant species.

NOTICE OF PRELIMINARY DECISION

In accepting this application for expedited review, the Planning Director is granting preliminary approval of the development. The Gorge Commission, U.S. Forest Service, Indian tribal governments, and property owners within 750 feet of the subject tract will be given 14 days to provide comments. If no comments are received, the decision shall become final at the close of business on the 14th day. If substantive written comments are submitted, the Planning Director will either modify the decision to address the comments and re-issue it for a 14-day appeal period or re-direct the application to full review if comments establish that the proposed development is not eligible for expedited review.

Comments must be directed to the applicable approval criteria. Those in **bold** above are listed in §38.7100 of the County code. Failure to provide comments during the comment period will preclude a right to appeal.

Conditions/Limitations of Approval

1. If, during construction, cultural or historic resources are discovered, the applicant/owner shall immediately cease development activities and inform the Multnomah County Land Use Planning Division, Columbia River Gorge Commission, and the U.S. Forest Service of any discovery pursuant to MCC 38.7045(L) & (M), or MCC 38.7050(H) as applicable. Once halted, construction activities shall not resume until these standards have been satisfied.

2. Approval of this land use permit is based upon the statements made in this application and attached materials. No work shall occur under this permit other than that which is specified in these documents.

3. Development of structures must be commenced within 2 years of the date of this decision, and completed within 2 years of the date of commencement. The property owner may request an extension of either of these timeframes, as provided in MCC 38.0700. Such a request must be made prior to expiration of the permit.

This decision is final at the close of the comment period unless comments are received. If no comments are received, the effective date of the decision is April 7, 2022**.**

FOR STAFF USE

At close of the comment period (check one that applies):

Staff initial: _____

Date: _____

- ❑ No substantive written comments were received. The decision is final.
- ❑ Substantive written comments were received. The Planning Director will issue a letter addressing the comments and may modify this preliminary decision.
- ❑ Written comments were submitted showing that the proposed development is not eligible for expedited review. The project will be reviewed using the full development review process.

Any comments received are included in the County records for this application.

- ❑ Fill out NSA DR Database Form for Gorge Commission and include copy with file.

Appendix B

Supplemental Materials

NSA Road/Utility Expedited Application Supplemental Materials

<u>Scenic Resources, Item 2</u>

Latourell Road Stormwater Manhole Material Color:

- Design Specifications on Sheet HA03 call for a standard manhole cover and frame per the ODOT Standard Drawing RD356.
- ODOT Standard Drawing RD356 requires grey cast iron ASTM A 48, Class 35B.
- A sample chip of a new grey cast iron manhole cover is not available. However, a photo of an example manhole cover and a spec sheet for a new cover meeting the ODOT requirements are shown below:

Photo of existing storm sewer manhole in road:

Specifications Sheet for New Manhole Cover:

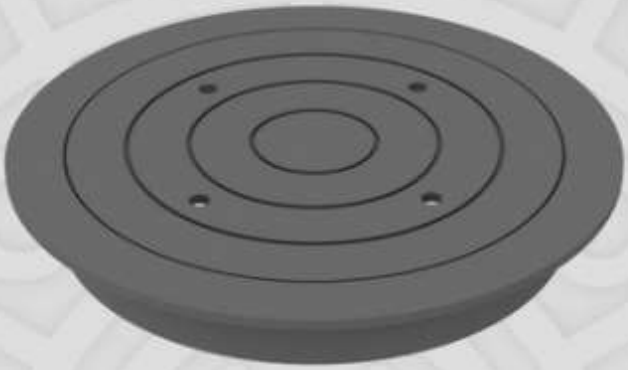

ITEM # 12344

NON-TRAFFIC SIDEWALK FRAME AND COVER

NOTES:

1. All dimensions are approximate and in inches.
2. Rating: Heavy Duty - Suitable for AASHTO H-20-44 and HS-20-44 highway loading.
3. Material: Gray Iron conforming to ASTM A48 / A48M-03, Class 30B.
   Please specify if required in Class 35B or Ductile Iron.
4. Cover is also available without holes.

- Std. depths 1½", 2", 2½" & 3"
  Matl. to be grey cast Iron ASTM A 48, Class 35B. Tolerance on non-machined surfaces to be |0.06", see general note 6

Recreation Resources, Item 6

Adjacent land uses are shown on the figure below:

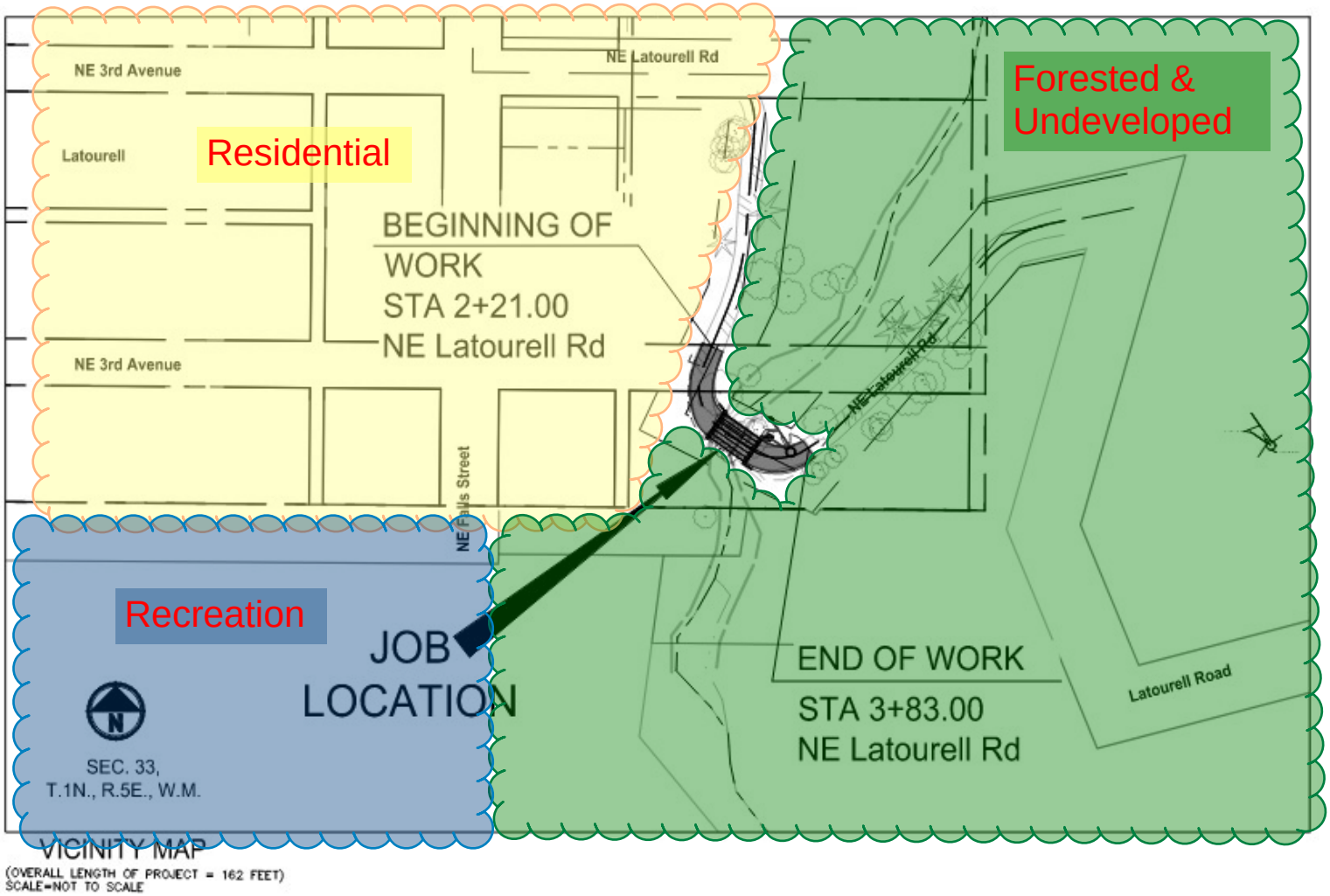

Appendix C

Stormwater Site Plans

M U L T N O M A H C O U N T Y

DEPARTMENT OF COMMUNITY SERVICES
TRANSPORTATION DIVISION

Latourell Road: Latourell Creek Bridge

NE Latourell Rd

GRADING, DRAINAGE, STRUCTURES, PAVING, SIGNING, AND ROADSIDE DEVELOPMENT

AUGUST 2021

INDEX OF SHEETS

SHEET No.	DESCRIPTION
A01	TITLE SHEET
BA01	TYPICAL SECTIONS
BB01	ROADWAY DETAILS
BB02	GUARDRAIL DETAILS
BB03	GUARDRAIL DETAILS
BB04	ROW AND SURVEY CONTROL PLAN
C01	ALIGNMENT AND GENERAL CONSTRUCTION
C01A	GRADING PLAN
C01B	PROFILE
EA01	TRAFFIC CONTROL DETAILS
EB01	TRAFFIC CONTROL DETOUR PLAN
FA01	LANDSCAPING PLAN
FC01	EROSION AND SEDIMENT CONTROL PLAN
HA01	STORM PLAN AND PROFILE
HA02	BIORETENTION SYSTEM DETAIL MODEL: FTBSVIB0404
HA03	MANHOLE WITH FLOW RESTRICTOR
HD01	TEMPORARY WATER MANAGEMENT PLAN
HF01	WATERWAY ENHANCEMENT
JO1	BRIDGE PLAN AND ELEVATION
JO2	GENERAL NOTES
JO3	FOUNDATION DATA SHEET
JO4	FOUNDATION PLAN
JO5	BENT 01 PLAN AND ELEVATION
JO6	BENT 02 PLAN AND ELEVATION
JO7	BENT DETAILS
JO8	WINGWALL DETAILS
JO9	SLAB SCHEDULE
J10	BRIDGE RAILING

1

Standard Drg. Nos.

RD317	- Culvert Embankment Protection and Riprap Pads	TM822	- Temporary Sign Supports
RD346	- Large Precast Manhole Details	TM840	- Closure Details
RD356	- Manhole Covers and Frames	TM841	- Intersection Work Zone Details
RD388	- Fill Height Tables for PVC Pipe	TM850	- 2-Lane, 2-Way Roadways
RD701	- Drainage Curbs		
RD1005	- Check Dams Type 1, 3 and 4	BR233	- Thrie-Beam Rail and Transition Pads
RD1015	- Inlet Protection Type 4	BR410	- 18" Precast Prestressed Slab
RD1030	- Sediment Barrier Type 2, 3 and 4	BR445	- Precast Prestressed Boxes and Slabs Details
RD1040	- Sediment Fence		
RD1055	- Slope and Channel Matting		
TM200	- Sign Installation Details		
TM800	- Tables, Abrupt Edge and PCMS Details		
TM810	- Temporary Pavement Markings		
TM820	- Temporary Barricades		
TM821	- Temporary Sign Supports		

1

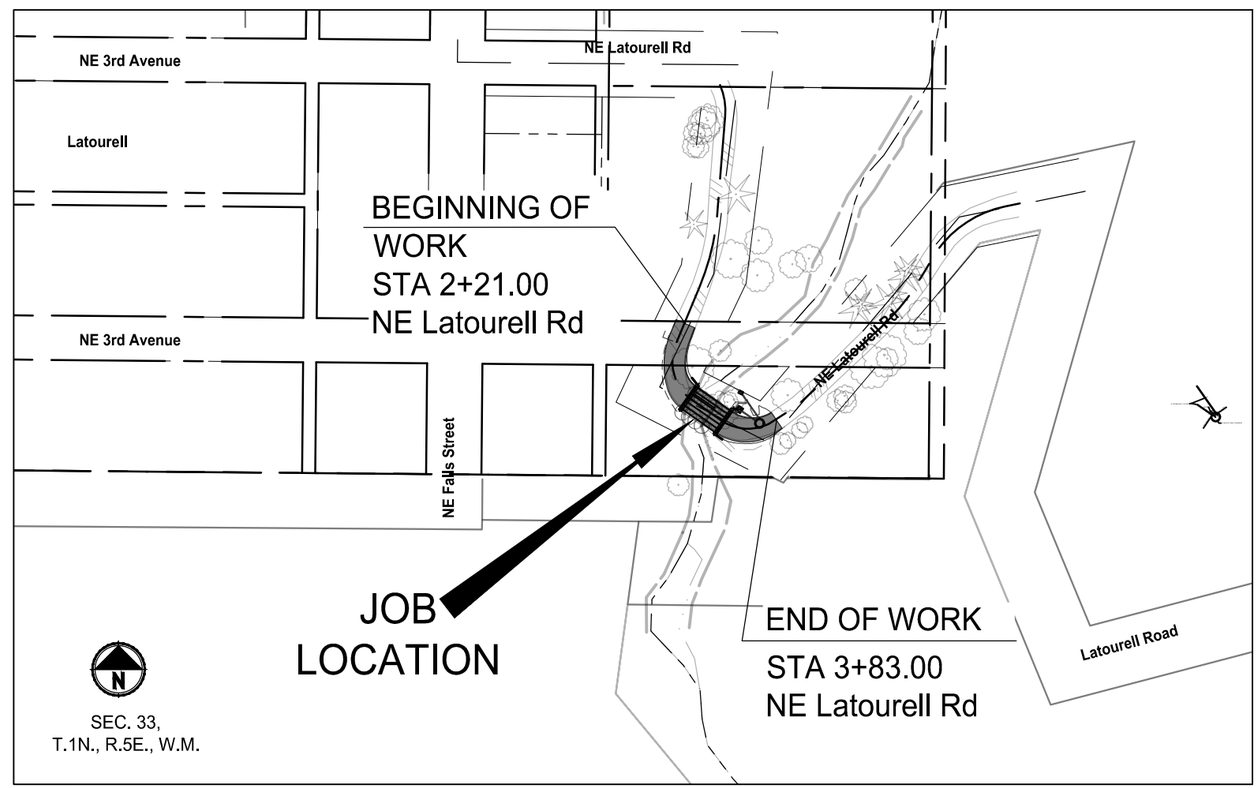

VICINITY MAP

(OVERALL LENGTH OF PROJECT = 162 FEET)
SCALE=NOT TO SCALE

NOTICE TO EXCAVATORS

ATTENTION: OREGON LAW REQUIRES YOU TO FOLLOW RULES ADOPTED BY THE OREGON UTILITY NOTIFICATION CENTER. THOSE RULES ARE SET FORTH IN OAR 952-001-0010 THROUGH OAR 952-001-0090. YOU MAY OBTAIN COPIES OF THE RULES BY CALLING THE CENTER. (NOTE: THE TELEPHONE NUMBER FOR THE OREGON UTILITY NOTIFICATION CENTER IS 503-232-1987)

POTENTIAL UNDERGROUND FACILITY OWNERS

Dig Safely

CALL THE OREGON ONE-CALL CENTER
1-800-332-2344

EMERGENCY TELEPHONE NUMBERS

PGE	xxxx
COMCAST	xxxx

APPROVALS

COUNTY ENGINEER — DATE

COUNTY PROJECT MANAGER — DATE

GENERAL NOTES:

1. SURVEY MONUMENTS OF RECORD IN THE OFFICE OF THE COUNTY SURVEYOR OR THE COUNTY CLERK THAT ARE REMOVED, DESTROYED OR DISTURBED MUST COMPLY WITH ORS 209.150 AND/OR ORS 209.155 IF APPLICABLE.
2. GRADE, SEED AND MULCH ALL DISTURBED SLOPES.

Parametrix

FINAL ELECTRONIC DOCUMENT AVAILABLE UPON REQUEST

LATOURELL RD: LATOURELL CREEK BRIDGE

LATOURELL ROAD: LATOURELL CREEK BRIDGE
TITLE SHEET
MULTNOMAH COUNTY

DATE: SEP. 2020 | PROJECT NO.: ##########

MULTNOMAH COUNTY
DEPARTMENT OF COMMUNITY SERVICES
TRANSPORTATION DIVISION
1620 S.E. 190th AVE. PORTLAND, ORE. 97233-5999

JON HENRICHSEN, P.E.
COUNTY ENGINEER

DESIGNED BY: CFC
DRAFTED BY: ACH
CHECKED BY: SNK

REVISIONS

NO.	DATE:	
1	02/18/22	ADDED AND UPDATED SHEET TITLES

Sheet No. A01

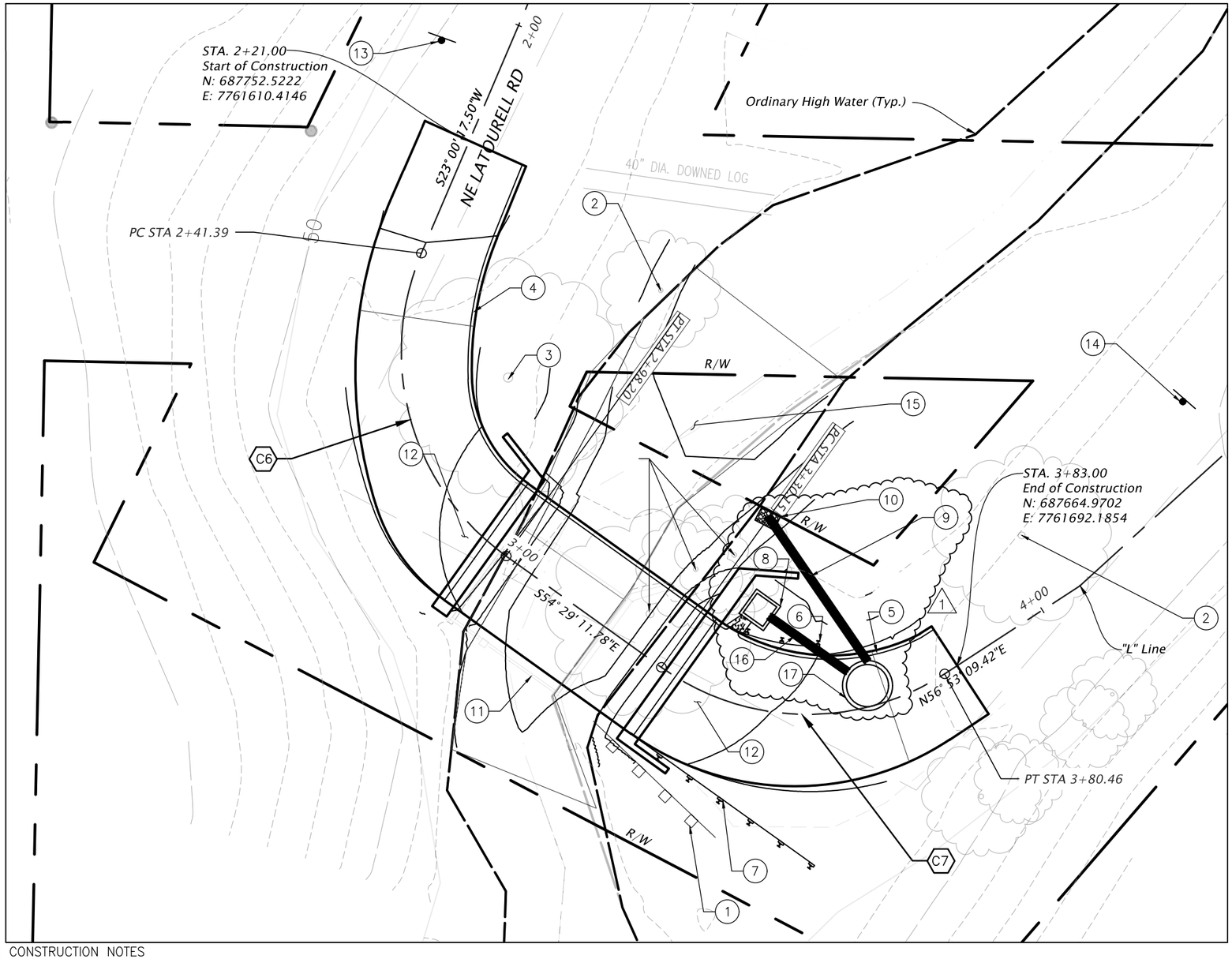

CENTERLINE CURVE DATA	
CURVE ID:	CURVE DATA:
C6	R=42.00' L=56.80' TAN=33.70 Δ=77.49
C7	R=42.00' L=50.31' TAN=28.67 Δ=68.63

N

SCALE IN FEET

0 20 40

Note:
1. All metal surfaces and components shall be powder coated per Section 00593.

CONSTRUCTION NOTES

1. Remove Extg. Guardrail – 29'
2. Protect Extg. Tree
3. Remove Extg. Tree Prior To March 1, 2022 – 4
4. Sta "L" 2+21.20 to 3+37.62, Lt Const. Asphalt Drainage Curb (See Sht. BA01 Std. Drg. No. RD701)
5. Sta "L" 3+40.05 to 3+83.00, Lt Const. Asphalt Drainage Curb (See Sht. BA01 Std. Drg. No. RD701)
6. Sta "L" 3+33.12 to 3+58.58 Lt Const. Steel Backed Timber Guardrail – 18.8' (See Sheet BB02)
7. Sta "L" 3+31.99 to 3+58.82 Rt Const. Steel Backed Timber Gaurdrail – 37.5' (For Details, see sheet BB02)
8. Inst. Bioretention System (Contech Filterra) With Concrete Flume (For Details, see sheet HA02)
9. Inst. 6" Storm Sewer Pipe – 30' FT (For details see sheet HA01) △1
10. Const. 1' x 4' x 4' Loose Riprap Outlet Pad (Class 50) – 1.0 Cu. Yd. (See Std. Drg. RD317)
11. Remove Extg. Bridge And Abutments And Construct Bridge (For Details, see sheet J01)
12. Const. Reinforced Abutment Backfill (For Details, see sheet BB01) Provide Temporary Shoring As Needed To Maintain Existing Side Slopes Outside Of Proposed Grading.
13. Sta "L" 2+07.37, 11 Rt Inst. W1–11 Warning Sign 36"x36" – 1 Each (See Std. Drg. No. TM200)
14. Sta "L" 4+41.08, 11 Lt Inst. W1–11 Warning Sign 36"x36" – 1 Each (See Std. Drg. No. TM200)
15. Grade Stream And Construct Waterway Enhancement (For Details, see sheet C01A HF01)
16. Inst. 6" storm sewer pipe – 20' (For details see HA01) △1
17. Inst. 84" Manhole with Flow Restrictor (For Details see sheet HA03)

REGISTERED PROFESSIONAL ENGINEER
64429PE
Steve Katko
OREGON
JAN. 23, 2001
STEVEN N. KATKO

Digitally signed by Steve Katko
DN: ElaSNJatko@parametrix.com, CN= Steve Katko, O=Parametrix, Inc., Email=ElaSNJatko, S=WA, C=US
Reason: I have reviewed this document
Date: 2022.03.02 16:20:22-08'

EXPIRES: 06/30/23

Parametrix

FINAL ELECTRONIC DOCUMENT AVAILABLE UPON REQUEST

LATOURELL RD: LATOURELL CREEK BRIDGE

ALIGNMENT AND GENERAL CONSTRUCTION
MULTNOMAH COUNTY

DATE: SEP. 2020 | PROJECT NO.: ##########

MULTNOMAH COUNTY
DEPARTMENT OF COMMUNITY SERVICES
TRANSPORTATION DIVISION
1620 S.E. 190th AVE. PORTLAND, ORE. 97233-5999

JON HENRICHSEN, P.E.
COUNTY ENGINEER

DESIGNED BY: CFC
DRAFTED BY: ACH
CHECKED BY: SNK

REVISIONS

NO.	DATE:	
△1	02/18/22	STORMWATER OUTFALL REVISIONS

Sheet No.
C01

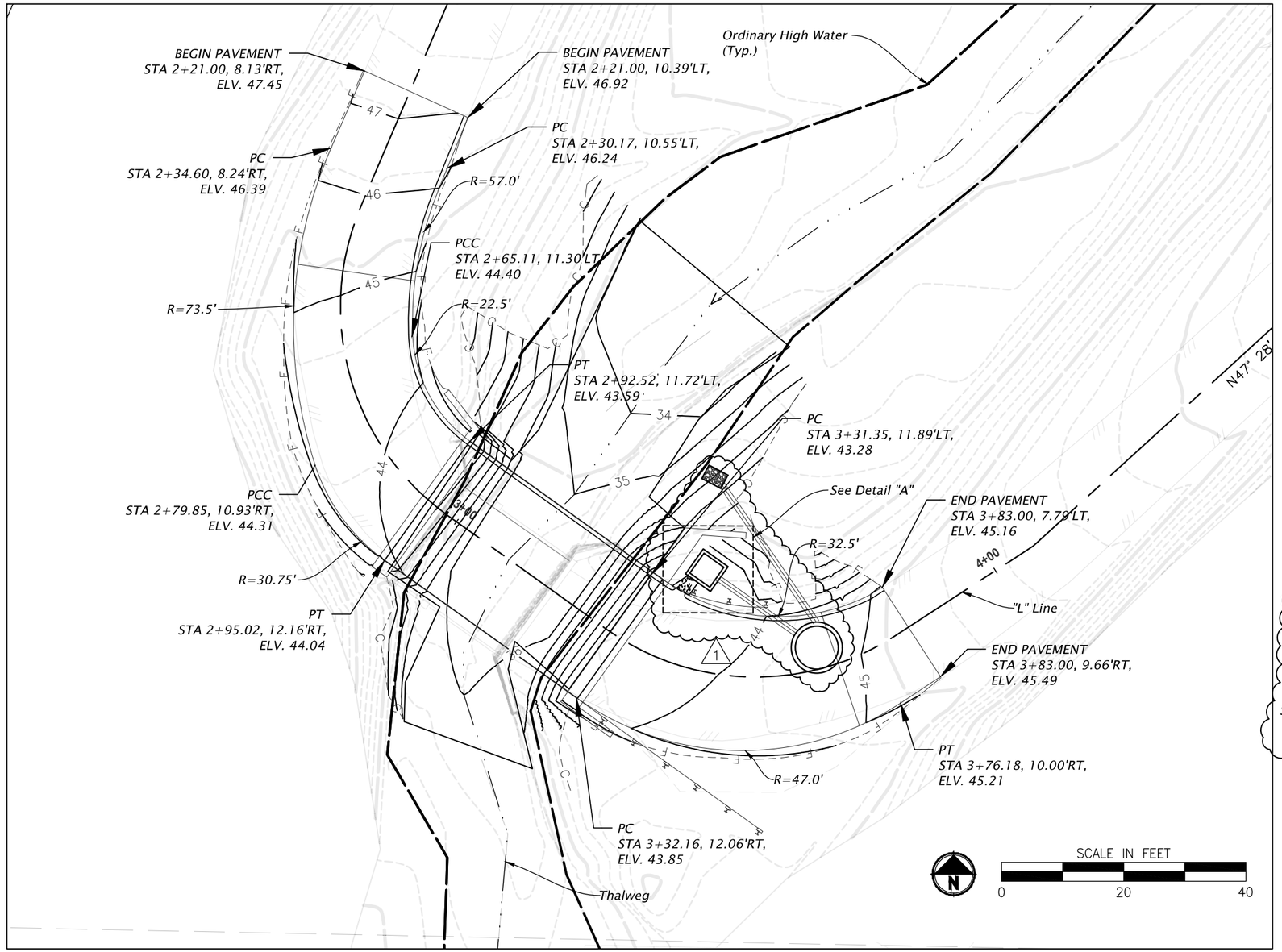

GRADING INFORMATION	
Surface Area of Grading:	4190 SF 3780 SF (Stream)
Estimated Total Volume of Disturbed Material:	265 CUYD (Emb.) 961 CUYD (Exc.)
Maximum Height of Slopes:	7 FT

GRADING NOTES:

1. Provisions for compaction, drainage, and stabilization of graded areas shall be in conformance with ODOT Standard Specifications for Construction, 2021.
2. Contours shown at 1' intervals
3. No work shall be conducted or equipment used outside of new grading limits shown. Any disturbed areas outside of these limits must be returned to original ground contours at no additional cost to Multnomah County.

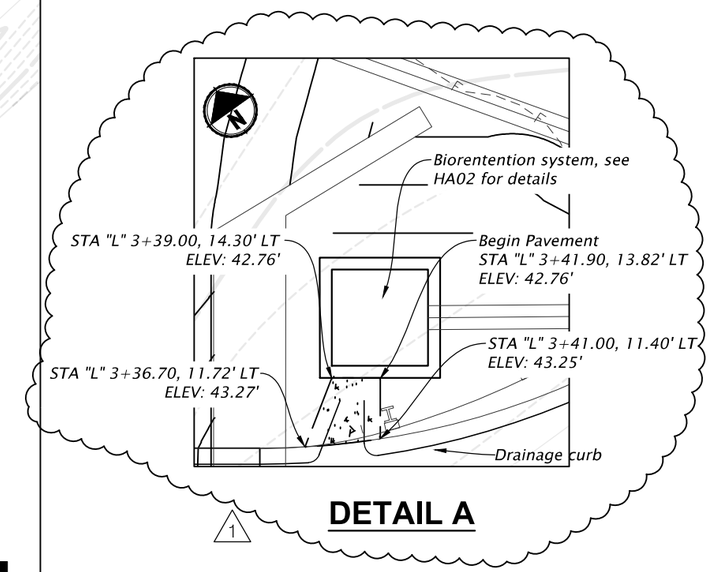

DETAIL A

REGISTERED PROFESSIONAL ENGINEER
64429PE
Steve Katko
OREGON
JAN. 23, 2001
STEVEN N. KATKO
EXPIRES: 06/30/23

Digitally signed by Steve Katko
DN: E, SKatko@parametrix.com, CN=Steve Katko, O=Parametrix, Inc., L=Portland, S=WA, C=US
Reason: I have reviewed this document
Date: 2022.03.02 16:22:11-08'00'

Parametrix

FINAL ELECTRONIC DOCUMENT AVAILABLE UPON REQUEST

LATOURELL RD: LATOURELL CREEK BRIDGE

GRADING PLAN
MULTNOMAH COUNTY

DATE: SEP. 2020 | PROJECT NO.: ##########

MULTNOMAH COUNTY
DEPARTMENT OF COMMUNITY SERVICES
TRANSPORTATION DIVISION
1620 S.E. 190th AVE. PORTLAND, ORE. 97233-5999

JON HENRICHSEN, P.E. — COUNTY ENGINEER

DESIGNED BY: CFC
DRAFTED BY: ACH
CHECKED BY: SNK

REVISIONS

NO.	DATE:	
1	02/18/22	STORMWATER OUTFALL REVISIONS

Sheet No. C01A

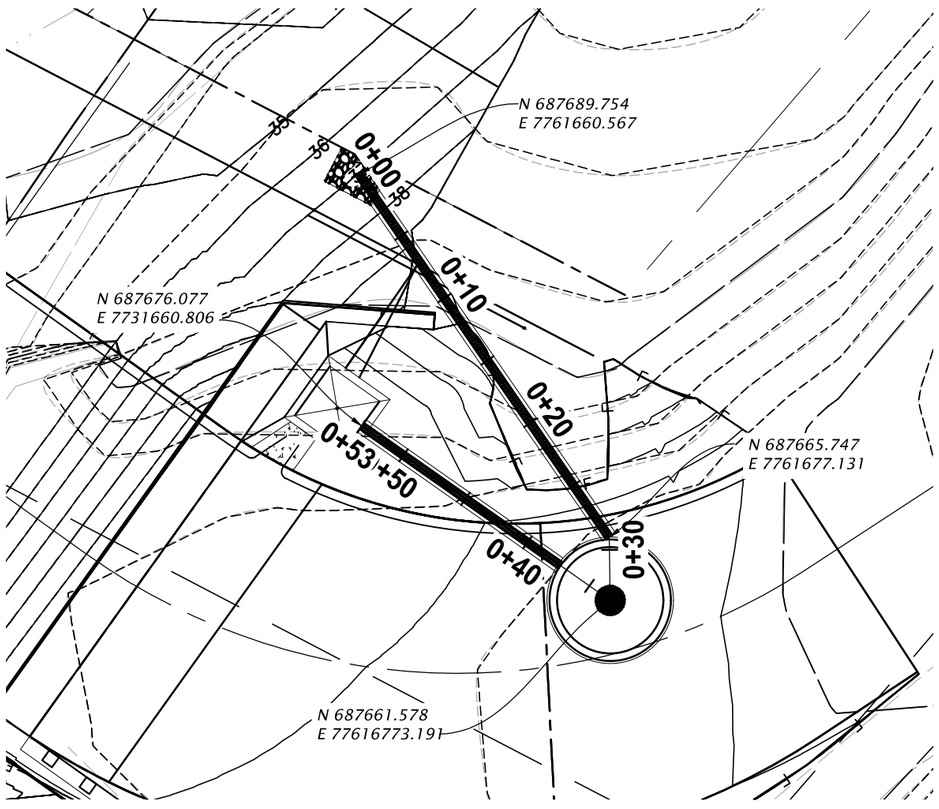

PLAN VIEW

SCALE: SCALE IN FEET 0 20 40

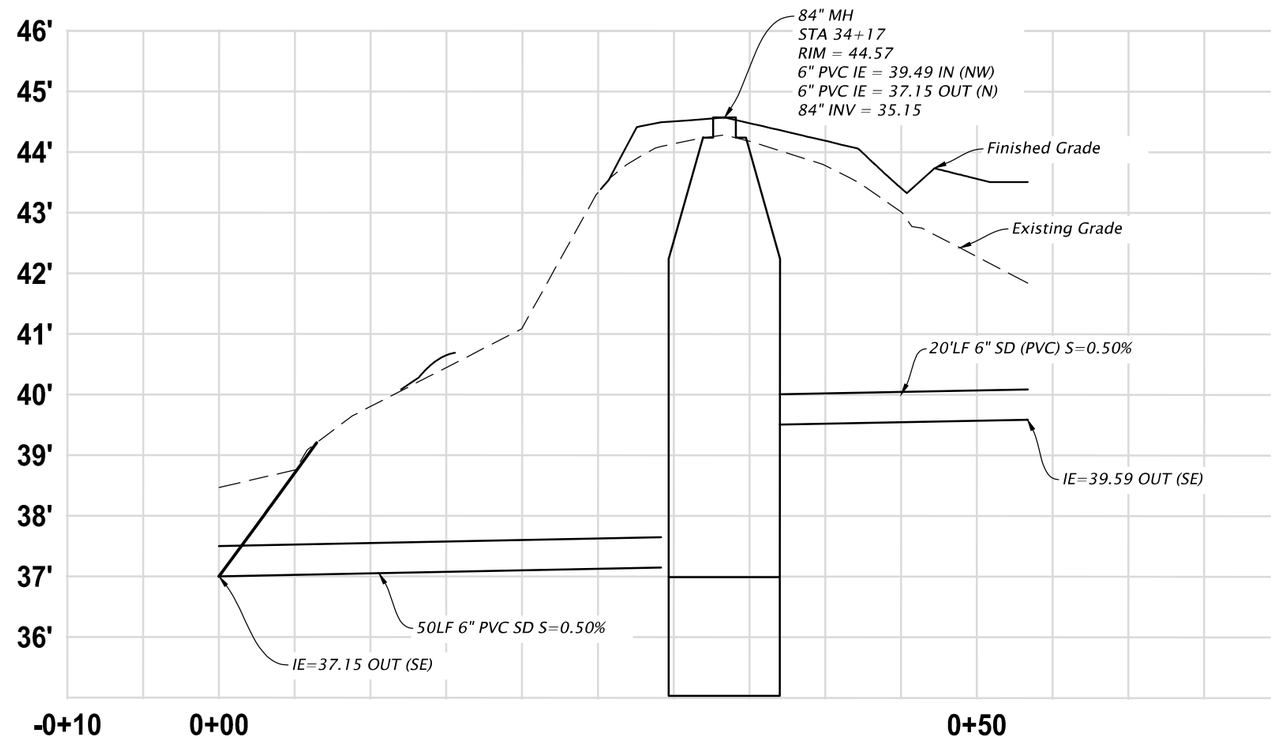

PROFILE VIEW

HORIZ: SCALE IN FEET 0 10 20

VERT: SCALE IN FEET 0 2.5 5

REGISTERED PROFESSIONAL ENGINEER
89894PE
DIGITALLY SIGNED 2022.03.02 11:21:47-08'00'
OREGON
May 22, 2015
SETH D. SOKOL

RENEW: 06/30/2022

Parametrix

FINAL ELECTRONIC DOCUMENT AVAILABLE UPON REQUEST

LATOURELL RD: LATOURELL CREEK BRIDGE

STORM PLAN AND PROFILE
MULTNOMAH COUNTY

DATE: SEP. 2020 | PROJECT NO.: ##########

MULTNOMAH COUNTY
DEPARTMENT OF COMMUNITY SERVICES
TRANSPORTATION DIVISION
1620 S.E. 190th AVE. PORTLAND, ORE. 97233-5999

COUNTY ENGINEER
JON HENRICHSEN, P.E.

DESIGNED BY: CFC
DRAFTED BY: ACH
CHECKED BY: SNK

REVISIONS

NO.	DATE:	
1	02/18/22	ADDED NEW SHEET

Sheet No. HA01

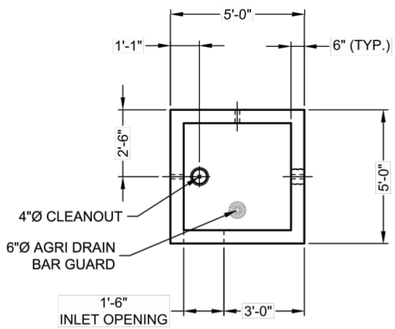

PLAN VIEW

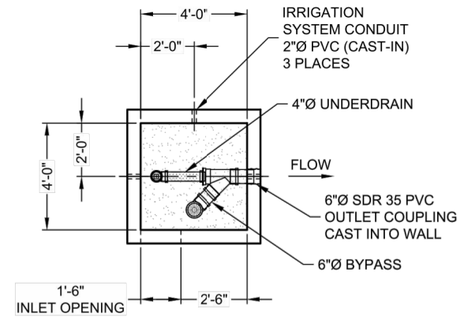

SECTION B-B

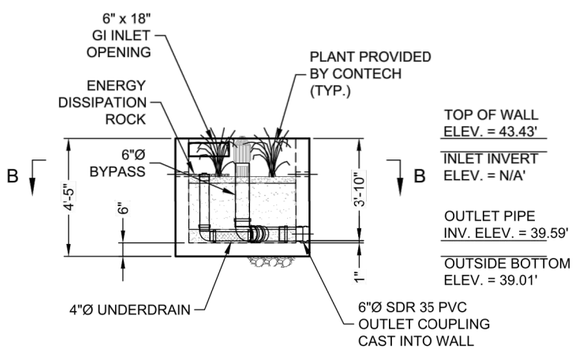

ELEVATION VIEW

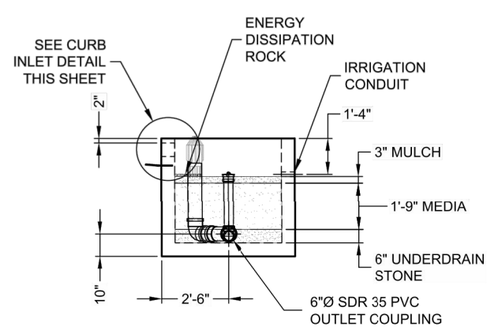

RIGHT END ELEVATION VIEW

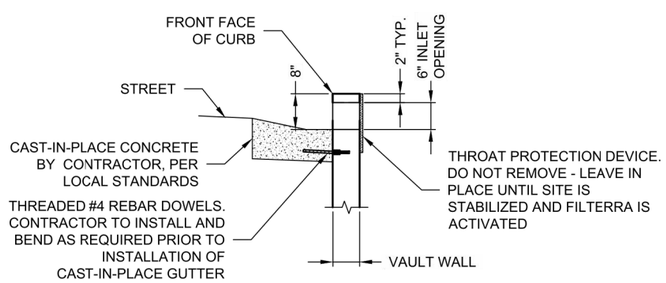

CURB INLET DETAIL

MATERIALS LIST

COUNT	DESCRIPTION	INSTALLED BY
T.B.D.	PLANT. SEE GENERAL NOTE 6	CONTECH
4 CF	MULCH. SEE GENERAL NOTE 6	CONTECH
1	ENERGY DISSIPATION ROCK LAYER	CONTECH
28 CF	STANDARD FILTERRA MEDIA (1.40 T)	CONTECH
8 CF	1/2" #4 ROUND AGGREGATE UNDERDRAIN STONE (0.38 T)	CONTECH
1	FILTERRA FLOWKIT TBD	CONTECH
1	6"Ø AGRI DRAIN BAR GUARD GRATE, BLACK	CONTRACTOR
1	6"Ø SDR 35 COUPLING	CONTECH
3	2"Ø PVC IRRIGATION CONDUIT	CONTECH
1	FILTERRA GI INLET (GRATEMASTER 18")	CONTECH

SITE DESIGN DATA

BIOFILTRATION MEDIA INFILTRATION RATE	100 in/hr

AS WITH ALL OPEN TOP BIORETENTION SYSTEMS, FILTERRA BIOSCAPE VAULT IS OPEN TO THE ATMOSPHERE WITH A MEDIA SURFACE RECESSED BELOW FINISHED GRADE. CONTRACTOR OR OWNER IS RESPONSIBLE FOR PROVIDING ANY REQUIRED SAFETY MEASURES AROUND SYSTEM PERIMETER. TO MAINTAIN AESTHETICS, REMOVAL OF HEAVY STORMWATER DEBRIS MAY BE NECESSARY BETWEEN REGULAR FILTERRA SYSTEM MAINTENANCE EVENTS.

GENERAL NOTES

1. CONTECH TO PROVIDE ALL MATERIALS UNLESS NOTED OTHERWISE
2. FOR FABRICATION DRAWINGS WITH DETAILED STRUCTURE DIMENSIONS AND WEIGHTS, PLEASE CONTACT YOUR CONTECH ENGINEERED SOLUTIONS LLC REPRESENTATIVE. www.ContechES.com
3. FILTERRA WATER QUALITY STRUCTURE SHALL BE IN ACCORDANCE WITH ALL DESIGN DATA AND INFORMATION CONTAINED IN THIS DRAWING.
4. STRUCTURE SHALL MEET PEDESTRIAN LIVE LOAD WITH H-5 (4000 LBS.) WHEEL LOAD MOUNTING THE CURB AND ADJACENT HS-20 LIVE LOAD SURCHARGE ON THE WALLS OF THE STRUCTURE, ASSUMING EARTH COVER OF 0' AND GROUNDWATER ELEVATION AT, OR BELOW, THE OUTLET PIPE INVERT ELEVATION. ENGINEER OF RECORD TO CONFIRM ACTUAL GROUNDWATER ELEVATION
5. FILTERRA STRUCTURE SHALL BE PRECAST CONCRETE CONFORMING TO ASTM C857, ASTM C918 AND ACI-318 LOAD FACTOR DESIGN METHOD
6. PLANT, MULCH, AND DISSIPATION ROCKS SUPPLIED BY CONTECH AND DELIVERED AT TIME OF SYSTEM ACTIVATION. PLANT SELECTION SHALL BE DONE BY THE ENGINEER OF RECORD IN ACCORDANCE WITH THE PROJECT PLANS AND SPECIFICATIONS

INSTALLATION NOTES

A. ANY SUB-BASE, BACKFILL DEPTH, AND/OR ANTI-FLOTATION PROVISIONS ARE SITE-SPECIFIC DESIGN CONSIDERATIONS AND SHALL BE SPECIFIED BY ENGINEER OF RECORD
B. CONTRACTOR TO PROVIDE EQUIPMENT WITH SUFFICIENT LIFTING AND REACH CAPACITY TO LIFT AND SET THE FILTERRA STRUCTURE. SPREADER BAR WITH SUFFICIENT CABLE IS REQUIRED FOR SAFETY AND REDUCTION OF DAMAGE TO CONCRETE STRUCTURE
C. CONTRACTOR TO INSTALL JOINT SEALANT BETWEEN ALL STRUCTURE SECTIONS AND ASSEMBLE STRUCTURE
D. CONTRACTOR TO PROVIDE AND INSTALL INLET AND OUTLET PIPES, AS NEEDED. PVC COUPLING IS CAST-IN TO STRUCTURE WALL FOR OUTLET CONNECTION
E. CONTRACTOR TO TAKE APPROPRIATE MEASURES TO PROTECT FILTERRA MEDIA BAY FROM CONSTRUCTION-RELATED EROSION RUNOFF
F. CONTECH IS RESPONSIBLE FOR ACTIVATION OF THE SYSTEM WHICH INCLUDES PLANTING OF THE SPECIFIED PLANT, MULCH INSTALLATION, AND PLACING OF DISSIPATION ROCK. ACTIVATION ONLY OCCURS WHEN THE SITE IS FULLY STABILIZED WITH FINAL PAVEMENT OR LANDSCAPING INSTALLED AND CLEANED OF CONSTRUCTION SEDIMENT
G. CONTACT CONTECH MAINTENANCE AND FIELD OPERATIONS AT 513-645-7770 TO SCHEDULE ACTIVATION
H. IT IS RECOMMENDED THAT ALL FILTERRA UNITS BE WATERED BY IRRIGATION LINES OR SPRINKLER SYSTEMS ON A REGULAR BASIS. FILTERRA UNITS MAY BE EQUIPPED WITH IRRIGATION HOLES FOR NEW OR EXISTING IRRIGATION LINES UPON REQUEST

STRUCTURE WEIGHT
APPROXIMATE HEAVIEST PICK = 11500 LBS.
BASE SECTION SHIPPED WITH STONE AND FILTERRA MEDIA INSTALLED
STRUCTURE DELIVERED IN 1 PIECE(S)

MAX. FOOTPRINT = 5' x 5'

RENEW: 06/30/2022

Parametrix

FINAL ELECTRONIC DOCUMENT AVAILABLE UPON REQUEST

LATOURELL RD: LATOURELL CREEK BRIDGE

BIORETENTION SYSTEM DETAIL
MODEL: FTBSVIB0404
MULTNOMAH COUNTY

DATE: SEP. 2020 | PROJECT NO.: ##########

MULTNOMAH COUNTY
DEPARTMENT OF COMMUNITY SERVICES
TRANSPORTATION DIVISION
1620 S.E. 190th AVE. PORTLAND, ORE. 97233-5999

JON HENRICHSEN, P.E.
COUNTY ENGINEER

DESIGNED BY: CFC
DRAFTED BY: ACH
CHECKED BY: SNK

REVISIONS

NO.	DATE:	
1	02/18/22	REVISED ENTIRE SHEET

Sheet No. HA02

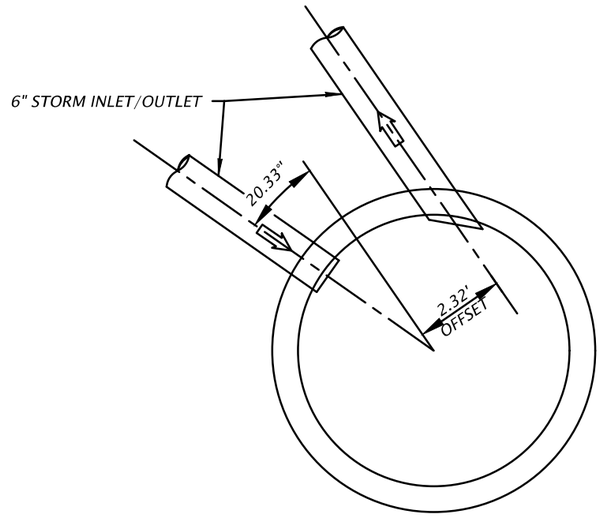

PLAN VIEW

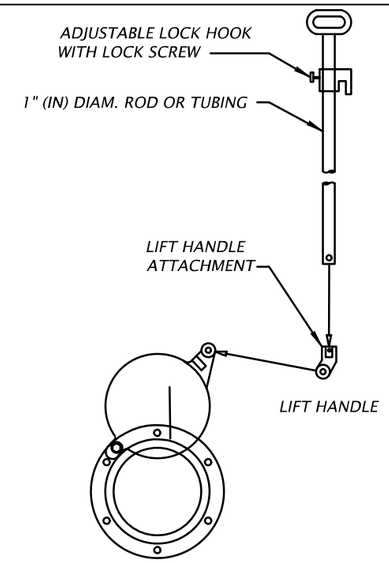

MAXIMUM OPENING

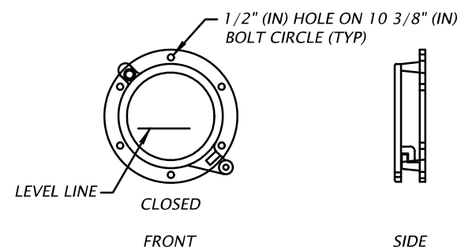

SHEAR GATE DETAILS

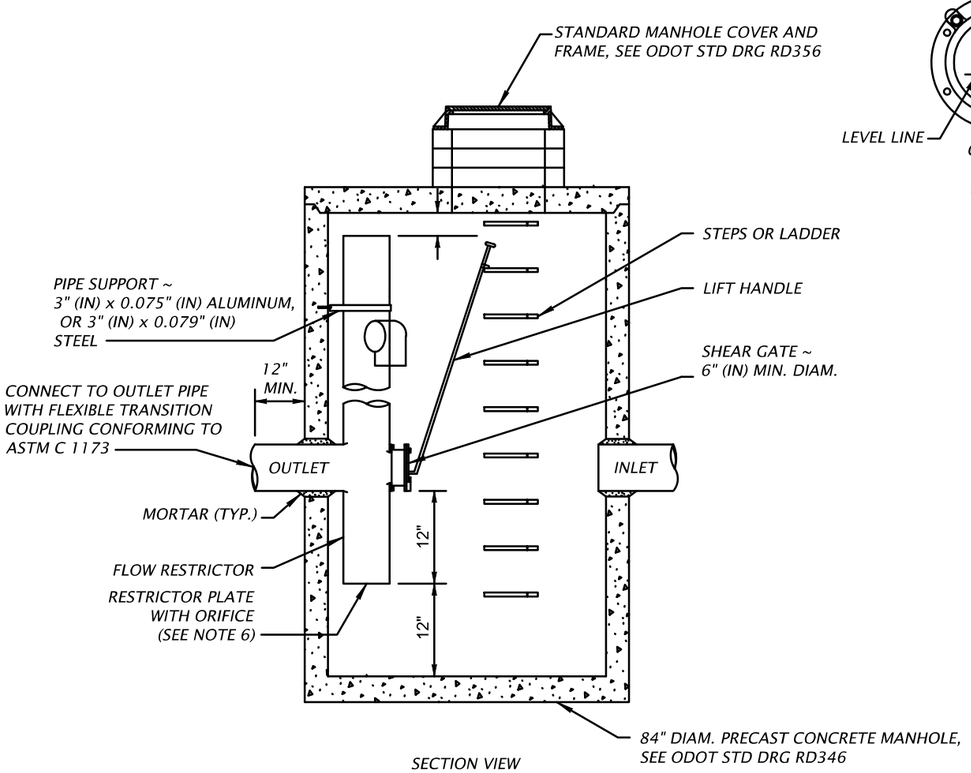

SECTION VIEW

NOTES

1. Restrictor plate with orifice as specified in the Table. The opening is to be cut round and smooth.

FLOW CONTROL STRUCTURE TABLE	
F.L. (IN)	39.49'
INLET PIPE DIAM. (IN.)	6
FL (OUT)	37.15'
OUTLET PIPE DIAM. (IN.)	6
NUMBER OF ORIFICES	1
ORIFICE ELEVATION	36.15
DIAMETER OF ORIFICE (IN.)	0.68
OVERFLOW ELEVATION	41.05
RIM ELEVATION	44.57
MAX. STRUCTURE INV.	35.15

REGISTERED PROFESSIONAL ENGINEER
89894PE
DIGITALLY SIGNED 2022.03.02 11:20:45-08'00'
OREGON
MAY 22, 2015
SETH D. SOKOL
RENEW: 06/30/2022

Parametrix

FINAL ELECTRONIC DOCUMENT AVAILABLE UPON REQUEST

LATOURELL RD: LATOURELL CREEK BRIDGE

MANHOLE WITH FLOW RESTRICTOR
MULTNOMAH COUNTY

DATE: SEP. 2020 | PROJECT NO.: ##########

MULTNOMAH COUNTY
DEPARTMENT OF COMMUNITY SERVICES
TRANSPORTATION DIVISION
1620 S.E. 190th AVE. PORTLAND, ORE. 97233-5999

JON HENRICHSEN, P.E. — COUNTY ENGINEER

DESIGNED BY: CFC
DRAFTED BY: ACH
CHECKED BY: SNK

REVISIONS

NO.	DATE:	
1	02/18/22	ADDED NEW SHEET

Sheet No. HA03

Appendix A

Cultural Resources Report

Oregon
Kate Brown, Governor

Parks and Recreation Department
State Historic Preservation Office
725 Summer St NE Ste C
Salem, OR 97301-1266
Phone (503) 986-0690
Fax (503) 986-0793
www.oregonheritage.org

October 8, 2019

Ms. Emily Miletich
Multnomah County
1403 SE Water Ave
Portland, OR 97214

RE: SHPO Case No. 19-1461
MULTCO Parametrix Project P90 5940031, NE Latourell Road Bridge Replacement
Replacement of existing NE Latourell Road Bridge
1N 5E 29, Latourell, Multnomah County

Dear Ms. Miletich:

Our office recently received your report for the NE Latourell Road Bridge Replacement project, as referenced above. Thank you for your submittal.

We have reviewed your report (SHPO Report# 30670) and agree that the project activities, as described in your report, will likely have no adverse effect on historic properties associated with the archaeological context. Additional archaeological research is not anticipated for this project under the *Management Plan for the Columbia River Gorge National Scenic Area* (August 2016). We look forward to continued Section 106 of the National Historic Preservation Act (per implementing regulations 36 CFR 800) consultation with the lead federal agency. The lead federal agency – based on additional information from consulting parties or with a better understanding of the undertaking – may make differing determinations of eligibility or findings of effect. Our office will review and comment as appropriate.

In the unlikely event archaeological features or additional sites (i.e., historic or prehistoric) are encountered, all activities should cease immediately and a professional archaeologist should be contacted to evaluate the discovery. Under state law (ORS 358.905-955 & ORS 97.740) archaeological sites, objects and human remains are protected on both public and private land in Oregon. If project impacts and the degree/type of required ground disturbance changes from that outlined in your report, further consultation with our office will be required before proceeding with the proposed activity.

This letter refers to archaeological resources only. Comments pursuant to a review for above-ground historic resources will be sent separately. If you have any questions regarding any future discovery, or this letter, feel free to contact our office.

Sincerely,

Shane P. James, M.S., RPA
SHPO Archaeologist
(503) 986-0805
shane.james@oregon.gov

cc: Jennifer Hughes, Parametrix

Oregon
Kate Brown, Governor

Parks and Recreation Department
State Historic Preservation Office
725 Summer St NE Ste C
Salem, OR 97301-1266
Phone (503) 986-0690
Fax (503) 986-0793
www.oregonheritage.org

October 7, 2019

Ms. Emily Miletich
Multnomah County
1403 SE Water Ave
Portland, OR 97214

RE: SHPO Case No. 19-1461
MULTCO Parametrix Project P90 5940031, NE Latourell Road Bridge Replacement
Replacement of existing NE Latourell Road Bridge
1N 5E 29, Latourell, Multnomah County

Dear Ms. Miletich:

We have reviewed the materials submitted on the project referenced above. Based on the information provided, we concur that the NE Latourell Road Bridge and NE Latourell Road are not eligible for listing in the National Register of Historic Places. We also concur that the Guy W. Talbot State Park is eligible for listing in the National Register. Based on the information provided, we concur that the proposed undertaking will result in no adverse effect to historic properties. This letter refers to above-ground historic resources only. Comments pursuant to a review for archaeological resources, if applicable, will be sent separately.

These comments are provided for SHPO review as outlined in the *Management Plan for the Columbia River Gorge National Scenic Area* (August 2016). We look forward to continued Section 106 of the National Historic Preservation Act (per implementing regulations 36 CFR 800) consultation with the lead federal agency. The lead federal agency – based on additional information from consulting parties or with a better understanding of the undertaking – may make differing determinations of eligibility or findings of effect. Our office will review and comment as appropriate. Please feel free to contact me if you have any questions, comments, or need additional assistance.

Sincerely,

Tracy Schwartz
Historic Preservation Specialist
(503) 986-0677
tracy.schwartz@oregon.gov

cc: Jennifer Hughes, Parametrix

Report #

SHPO Use

Year: 2019

State Historic Preservation Office Report Cover Page

Title: Phase 1 Archaeological Survey for the NE Latourell Road Bridge Replacement, Multnomah County, Oregon

REPORT

Author(s): Carmen Sarjeant and Judith A. Chapman

Agency/Client: Archaeological Investigations Northwest, Inc. (AINW)

District/Contractor: Parametrix, Inc.

Agency/Client Report#: AINW Report No. 4269 Project Acres: 0.75 Survey Acres: 0.75

LOCATION

County(ies): Multnomah

Township:		Range:		Section(s):	Township:		Range:		Section(s):
1	N	5	E	29					

TESTING

Archaeological Permit Number(s): AP-2704 Accession Number:

Reports submitted to: Tribes: ☐ UOMNCH: ☐ LCIS: ☐ Curation:

Report Addresses Testing: ☐

CONSULTATION

Have tribes been contacted or consulted? List tribes:

List any other groups contacted or consulted:

PA/ MOA

Report is associated with: PA ☐ MOA ☐

REPORTS WITHOUT A COMPLETE AND ACCURATE COVER PAGE AND APPROPRIATE ADDITIONAL PAGES MAY BE RETURNED. CHECK THE SHPO WEBSITE TO MAKE SURE YOU HAVE THE MOST CURRENT VERSION.

Report #

SHPO Use

State Historic Preservation Office Report Summary of Resources and NRHP Eligibility

RESOURCES

	Archaeological: Site:	Isolate:	Built Environment:	TCP:	HPRCSIT:	Other:
Count:	0	0	0	0	0	

***Please be sure all archaeological forms have been submitted on-line**

EVALUATE PROPERTIES UNDER ALL FOUR CRITERIA.
BE SURE TO INCLUDE JUSTIFICATION IN THE REPORT

NRHP ELIGIBILITY

Oregon On-Line Form #:	Trinomial: Temp# or Name:	Criterion A:	Criterion B:	Criterion C:	Criterion D:

PHASE 1 ARCHAEOLOGICAL SURVEY FOR THE NE LATOURELL ROAD BRIDGE REPLACEMENT, MULTNOMAH COUNTY, OREGON

Prepared For
Parametrix, Inc.
Portland, Oregon

August 22, 2019

REPORT NO. 4269

Archaeological Investigations Northwest, Inc.

3510 NE 122nd Ave. ● Portland, OR ● 97230 Phone 503 761-6605 ● Fax 503 761-6620

PHASE 1 ARCHAEOLOGICAL SURVEY FOR THE NE LATOURELL ROAD BRIDGE REPLACEMENT MULTNOMAH COUNTY, OREGON

PROJECT NAME: NE Latourell Road Bridge Replacement

LOCATION: Latourell, Multnomah County, Oregon

Township	Range	Section
1 North	5 East	29

USGS QUAD: *Bridal Veil, OR-WA,* 7.5-minute, 2017

COUNTY: Multnomah

PROJECT: Replacement of the existing NE Latourell Road Bridge on NE Latourell Road with a new bridge structure on the existing alignment.

PROJECT APE: 0.75 acre

SHPO PERMIT NO: AP-2704

FINDINGS: AINW recommends a finding of "**No Historic Properties Affected**" for archaeological resources.

No pre-contact or historic-period archaeological resources were identified in the APE. No further archaeological work is needed.

PREPARERS: Carmen Sarjeant, Ph.D., R.P.A., Supervising Archaeologist, and Judith A. Chapman, M.A., R.P.A, Senior Archaeologist/Architectural Historian

INTRODUCTION

Parametrix, Inc., has contracted with Archaeological Investigations Northwest, Inc. (AINW), to conduct a phase 1 archaeological survey for the NE Latourell Road Bridge Replacement project, in the unincorporated community of Latourell, Multnomah County, Oregon (Figure 1). The project plans to remove the existing 1968 bridge on NE Latourell Road and replace it with a new bridge in the existing alignment. The Area of Potential Effects (APE) encompasses the maximum geographic area for the removal and replacement of the bridge and the roadway approaches to the bridge (Figure 2).

The project is on public land within the Multnomah County right-of-way on NE Latourell Road in the Guy W. Talbot State Park. The project will be funded through the State Funded Local Projects (SFLP) fund exchange. The project is in the Special Management Area of the Columbia River Gorge National Scenic Area (CRGNSA), in which developments cannot adversely affect significant cultural resources. Non-federal projects follow the guidelines of the General Management Area of the CRGNSA.

A joint permit from the U.S. Army Corps of Engineers and Department of State Lands will be needed for the project. The archaeological survey will comply with Section 106 of the National Historic Preservation Act and Section 4(f) of the U.S. Department of Transportation Act, and will be done in coordination with Oregon State Parks and Recreation, the Oregon State Department of Transportation (ODOT), and the CRGNSA. The archaeological survey was completed by AINW staff who meet the professional qualifications of the Secretary of the Interior's Standards and Guidelines for Archaeology and who are ODOT-qualified as Cultural Resource Consultants in Archaeology. The work was conducted in compliance of state law ORS 358.653 and follows the Oregon State Historic Preservation Office (SHPO) guidelines.

The phase 1 archaeological survey was completed under SHPO Archaeological Excavation Permit No. AP-2704 and Oregon Parks and Recreation Department Scientific Research Permit No. 045-19. An archaeological work plan for the survey and shovel testing was coordinated with the CRGNSA archaeologist. AINW conducted a pedestrian survey of the APE, and identified areas suitable for testing due to low visibility and with a high probability for archaeological resources (Figures 2 and 3). Four shovel tests were excavated within the APE. No archaeological resources were identified during the pedestrian survey and shovel testing. AINW recommends a finding of "**No Historic Properties Affected**" for archaeological resources for the NE Latourell Road Bridge Replacement project. No further archaeological work is recommended for the project.

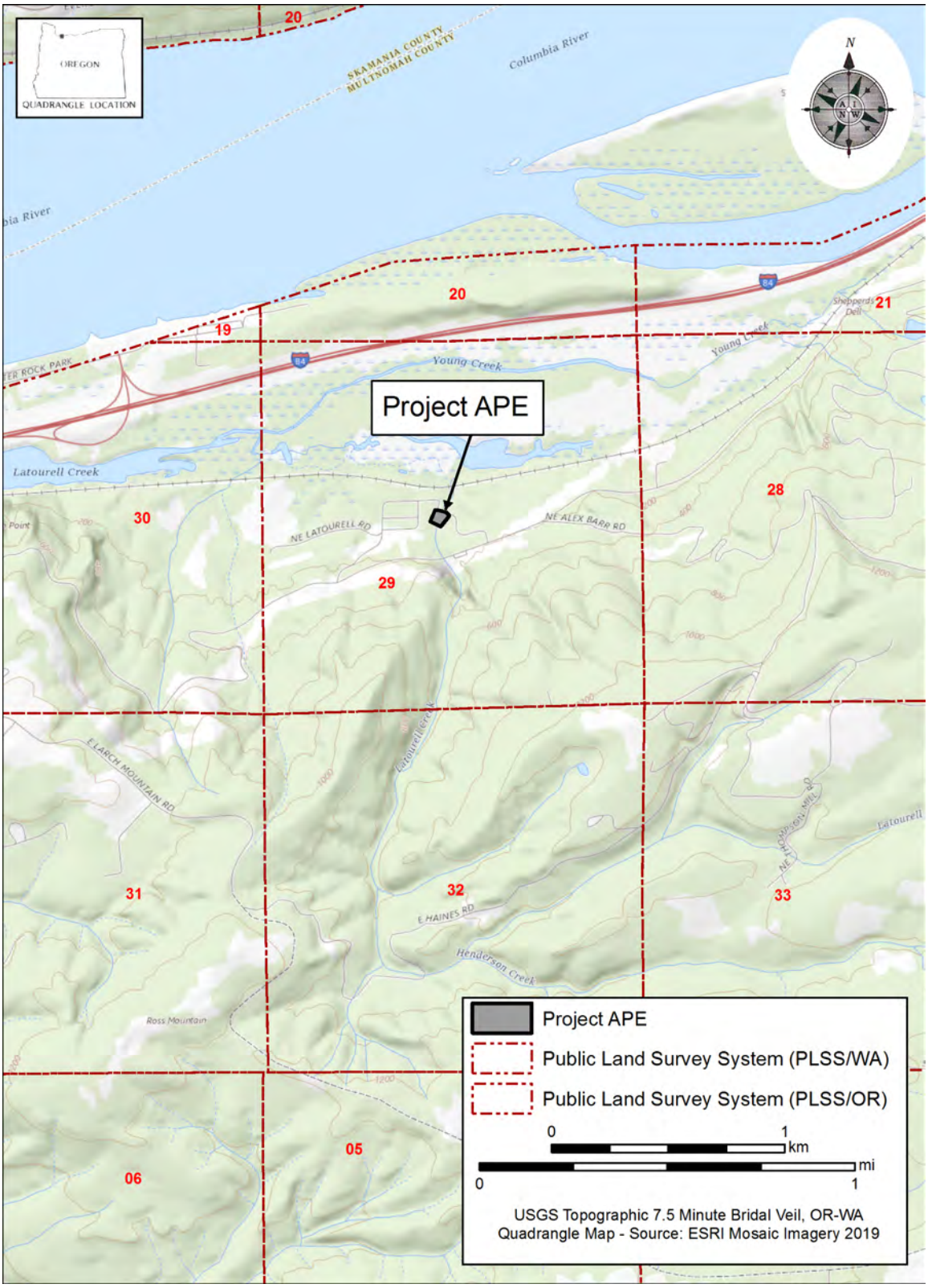

Figure 1. Location of the NE Latourell Road Bridge Replacement project, Multnomah County, Oregon.

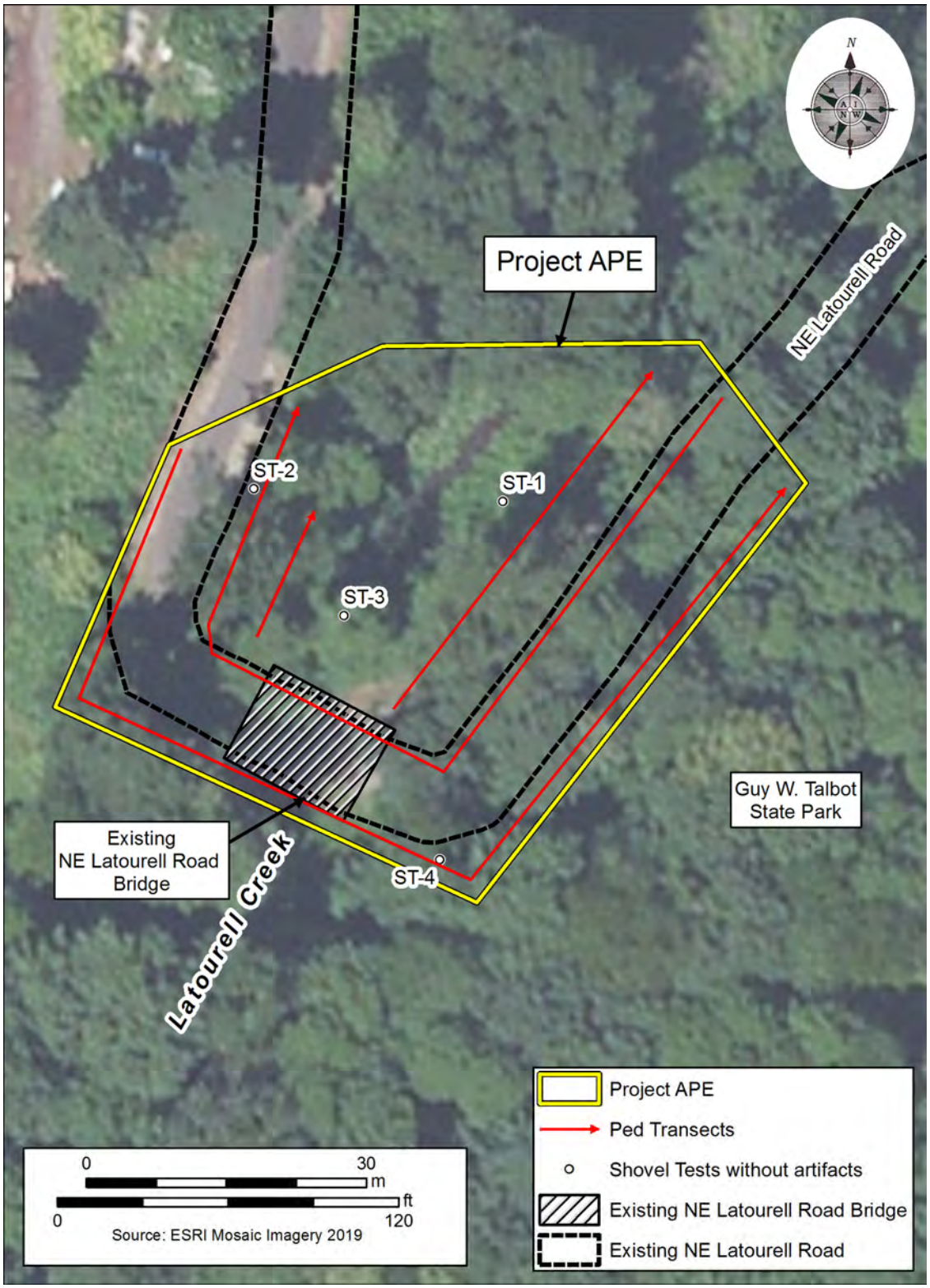

Figure 2. Four shovel tests were excavated within the APE for the NE Latourell Road Bridge Replacement project. No archaeological resources were identified during the pedestrian survey and shovel testing.

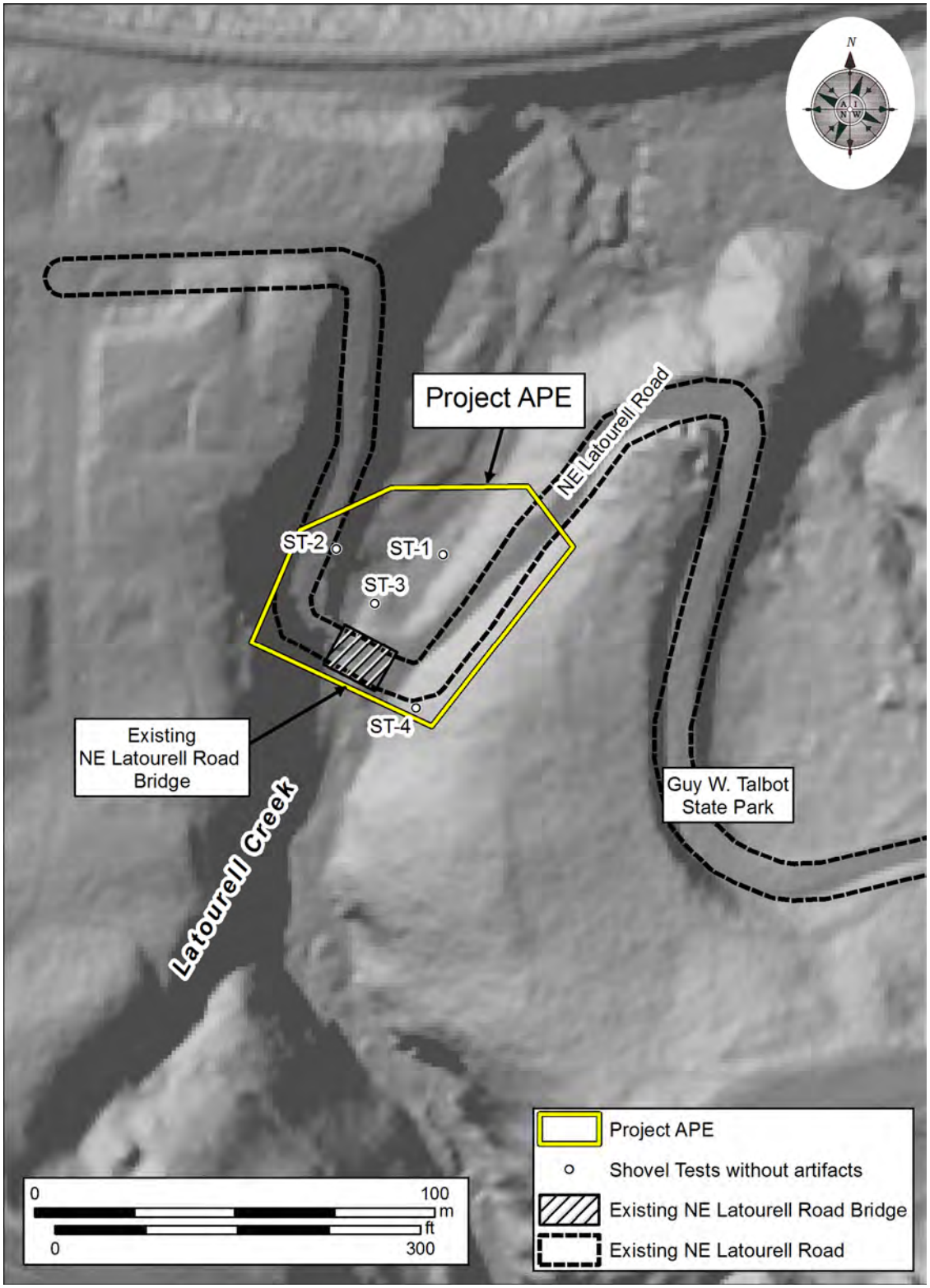

Figure 3. LiDAR imagery of the APE with shovel test locations excavated for the Latourell Creek Bridge Replacement project (DOGAMI 2019a). The steep slopes either side of NE Latourell Road were not tested.

LOCATION AND ENVIRONMENTAL SETTING

The project APE is to the east of the community of Latourell in the Columbia River Gorge, in Section 29, Township 1 North, Range 5 East, Willamette Meridian (Figures 1 and 2). The 0.75-acre APE is approximately 0.3 kilometers (km) (0.2 miles [mi]) north of Latourell Falls, between the Union Pacific Railroad 110 meters (m) (360 feet [ft]) to the north and the Historic Columbia River Highway 140 m (460 ft) to the south.

The APE is within the foothills of the Columbia River Gorge with Latourell Creek at the lowest lying point of the APE. The APE slopes upward either side of the creek to NE Latourell Road; the elevation of the APE ranges between 10 and 18 m (35 and 60 ft) (Figure 3; Oregon Department of Geology and Mineral Industries [DOGAMI] 2019a). NE Latourell Road curves to the southwest through the APE, and the existing NE Latourell Road Bridge is at the center of the southern limit of the APE.

The Columbia River Gorge is a canyon formed by basalt flows, known as Columbia River Basalt (Wells et al. 2009). The geology surrounding the project area is characterized by these Miocene basaltic lava flows and other volcanic formations (DOGAMI 2019b). Weakly consolidated younger formations in the Gorge, such as the Eagle Creek Formation, have caused erosion resulting in landslides (Palmer 1977; Pierson et al. 2016). The soil mapped for the APE is Burlington series, an alluvial fine sandy loam that is found on terraces along the Columbia River. Aschoff basalt outcrops are found to the south of the APE, on steeper mountain slopes (U.S. Department of Agriculture, Natural Resources Conservation Service 1977, 2019).

The project APE is within a forested area in the *Tsuga heterophylla* vegetation zone of the Western Cascade province. Forests in this region typically contain Douglas-fir, western hemlock, western redcedar, red alder, and Oregon ash trees with an understory of salal, Oregon grape, vine maple, red huckleberry, and salmonberry (Franklin and Dyrness 1973:72-82). Riparian flora, including cottonwood and willow trees, as well as hardhack, wild rose, skunk cabbage, and various water-tolerant grasses, sedges, and reeds, grow in wetland areas and along creeks.

CULTURAL SETTING

Native Peoples

The Western Cascades of the Columbia River Gorge were occupied by Chinook speakers, where ethnohistoric records have documented villages found on sandy river terraces (French and French 1998). Landslides in the area are thought to have destroyed early sites in the Columbia River Gorge, and recorded prehistoric sites near the project area postdate the Bonneville Landslide that occurred 600 years ago (Palmer 1977; Pettigrew 1990:523-524; Pierson et al. 2016).

Some of the closest village sites to the project area are on the Washington side of the Columbia Gorge, including *gaławašúxʷal* at Washougal, 10 km (6.2 mi) northwest of the project area (Zenk et al. 2016). Houses were semi-subterranean in winter, and summer structures were aboveground; plank houses were a central component of these villages (French and French 1998; Zenk et al. 2016).

Riverside villages took advantage of the Columbia River fish resources, which included sturgeon, euchalon, and salmon (Pettigrew 1990). These villages along the Columbia River may have been maintained throughout the year, even as some of the population moved for seasonal procurement of resources (Boyd and Hajda 1987). Seasonal patterns of migration may have seen groups from interior and upstream areas migrate downstream to riverbanks when fish runs increased (Boyd and Hajda 1987).

Salmon was dried and traded downriver from as far as The Dalles. Travel was facilitated by cedar log canoes (Silverstein 1990). In interior and upland regions elk, deer, bear, and small animals were hunted for food and skins using bows and arrows, pit traps, and spears (Boyd and Hajda 1987; Silverstein 1990). Woodworking and basketry with cedar bark were important crafts amongst the Chinook for the manufacture of utensils and containers (Silverstein 1990).

Historical Background

General Land Office (GLO) maps show Latourell was surveyed from as early as 1860 (GLO 1860). The town was named after Joseph C. Latourell, who moved to the area of Rooster Rock in 1859 with his wife, Grace. Latourell later became the postmaster, operated a fish wheel and boats, and worked in construction and farming, amongst other occupations. The town name was changed from Rooster Rock to Latourell Falls in 1887 (Friedman 1978:118-124). The APE is adjacent to the former summer estate of Guy Wester Talbot, who donated the property to the State of Oregon in 1929 (Oregon Parks and Recreation Department 2019).

Latourell's economy in the late nineteenth and early twentieth centuries was based on logging on Larch Mountain (Prohaska 1992:2). The logging industry was facilitated by the arrival of the Oregon-Washington Railroad and Navigation Company, which constructed a railway line along the south bank of the Columbia River, to the north of the APE, in 1883 (Prohaska 1992:78). Prior to the railway, the 1870s Dalles and Sandy Wagon Road followed the sharp curves and steep grade of the Columbia River Gorge, and likely followed the alignment of the existing NE Latourell Road within the APE (Hadlow 2000; Topinka 2019). An old wagon road was reportedly intersected by the Historic Columbia River Scenic Highway and continued up Larch Mountain (Connolly 2012). The Historic

Columbia River Scenic Highway was constructed starting in 1913 to the south of Latourell, and NE Latourell Road connects to the highway, 175 m (574 ft) southeast of the APE (Prohaska 1992:77). NE Latourell Road currently follows the same orientation shown on early maps and aerial photographs (Metsker Maps 1927; U.S. Geological Survey 1951, 1954). The extant NE Latourell Road Bridge in the APE was built in 1968.

RECORDS SEARCH AND LITERATURE REVIEW

Prior to the field survey, AINW conducted a review of the Oregon Archaeological Records Remote Access online database and reviewed materials in the AINW library. Historical maps, photographs, secondary published sources, and online sources were also reviewed. The background review identified previous cultural resource surveys and known archaeological resources within 3.2 km (2 mi) of the project APE, and determined the probability of encountering pre-contact and historic-period cultural resources within the APE.

In the immediate vicinity of the project area, historic-period archaeological sites have been encountered within the Guy W. Talbot State Park. These include site 35MU152, a historic-period debris scatter and remains of buildings, 150 m (492 ft) west of the APE. The site is unevaluated for listing in the National Register of Historic Places. A wooden structure, concrete footings, and a cut nail have also been found within 350 m (1,148 ft) of the APE (Connolly 2012; Tasa et al. 2007). The possible location of Latourell Field, identified on the 1860 GLO map, may now be under Interstate 84 (Tasa et al. 2007). These resources were identified during the survey of State Parks in 2006 (Tasa et al. 2007) or during a fiber optic cable placement survey (Connolly 2012). Other historic-period sites in the area include the foundation of the McGowan Cannery site (35MU124), and piling and dock sites (35MU157 and 35MU165) near Rooster Rock, 2.5 km west-northwest of the APE (Minor 2005; Reese et al. 1990). A Lewis and Clark camp is also mapped on the OARRA database, approximately 3.2 km (2 mi) west-northwest of the project area.

Few pre-contact sites have been recorded near the project area; however, the Columbia River Gorge contains rich evidence of Native American settlement. One reburial site is within 1.6 km (1 mi) of the project area (35MU219) (Nelson 2011). The nearest multicomponent site, 2.6 km (1.6 mi) to the west, near the Columbia River shoreline, contains a pre-contact cobble chopper and fire-cracked rock, and historic glass and pilings (35MU89) (Reese et al. 1990).

Based on a review of cultural resource records and background literature, nearby pre-contact archaeological resources have been found along the Columbia River shoreline and historic-period archaeological resources are within Guy W. Talbot State Park. Much of the project APE has been disturbed by the road and bridge construction and is on steep slopes or on the banks of the creek. However, there is potential for pre-contact materials within the APE alongside the creek, and for historic-period archaeological resources related to the early development of Latourell, NE Latourell Road, and the State Park.

ARCHAEOLOGICAL SURVEY METHODS AND FINDINGS

The archaeological pedestrian survey was conducted on May 23, 2019, by AINW Supervising Archaeologist Carmen Sarjeant, Ph.D., R.P.A. Shovel testing took place on August 1, 2019, by Carmen Sarjeant and AINW Staff Archaeologist Lea Loiselle, B.A. The project was under the overall supervision and management of Judith A. Chapman, M.A., R.P.A., Senior Archaeologist/Architectural Historian.

Pedestrian Survey

The survey took place within the right-of-way of NE Latourell Road either side of the NE Latourell Road Bridge and adjacent to Latourell Creek in meandering transects spaced 5 to 10 m (16 to 32 ft) apart (Figure 2; Photos 1 through 4). NE Latourell Road descends and curves to the southwest as it crosses Latourell Creek (Photo 1). Steep slopes on either side of NE Latourell Road were inaccessible during the survey and were observed downslope and upslope from the road and creek (Photos 1 and 2).

Ground surface visibility was extremely poor (0% to 5%) in the unpaved areas of the APE. Vegetation was dense within the APE, and included conifer and riparian trees and shrubs such as salmonberry, dogwood, and nettle (Photo 3). Road gravels were observed adjacent to the road, and riverine cobbles were at the creek edge. Larger angular boulders have been placed on the east side of the creek, south of the bridge. A small vehicle pull-out and disturbed soil was noted on the south side of NE Latourell Road, southeast of the bridge, where a guardrail has been installed (Photo 4). No archaeological materials were observed during the pedestrian survey.

Shovel Testing

Four shovel tests (ST-1 through ST-4) were excavated within the project APE (Figures 2 and 3; Photo 5). The shovel tests measured 30 centimeters (cm) (12 inches [in]) in diameter and were dug to a minimum depth of 50 cm (20 in) below the ground surface (Table 1). Excavated soils were screened through nested 6.4-and 3.2-millimeter (¼-and ⅛-in) mesh hardware cloth. The locations of the shovel tests were mapped with a Trimble Geo XH Global Positioning System unit. The excavation units were backfilled upon completion. The shovel tests were excavated under SHPO Archaeological Excavation Permit No. AP-2704 and Oregon Parks and Recreation Department Scientific Research Permit No. 045-19. Shovel testing took place within areas of the APE that were not recently disturbed, had poor ground surface visibility, and were identified with a higher potential for containing archaeological resources during the pedestrian survey. The steep slopes either side of NE Latourell Road were not shovel tested (Figure 3).

Shovel tests ST-1 and ST-3 were placed near Latourell Creek on lower-lying terrain, and shovel tests ST-2 and ST-4 were placed near NE Latourell Road. Only one of the excavated shovel tests exhibited undisturbed native soil, shovel test ST-1 (Photo 6). The soil within shovel test ST-1 was generally consistent with the Burlington series mapped for the area. The soil was a dark brown very fine sandy loam, although it was moist, and slightly plastic and sticky in comparison to Burlington sandy loams. Charcoal was found throughout shovel test ST-1.

Photo 1. Overview of the NE Latourell Road Bridge Replacement project APE from the northwest corner on NE Latourell Road. The project APE is steeply sloped on either side of the road, down to the creek and up to higher elevations. The view is towards the southeast.

Photo 2. Overview of the project APE from the northeast corner on NE Latourell Road. The view is towards the southwest.

Photo 3. Latourell Creek runs through the middle of the project APE. The view is towards the north.

Photo 4. The extant 1968 NE Latourell Road Bridge will be replaced and NE Latourell Road will be realigned for the project. The view is towards the southwest.

Photo 5. Shovel test ST-1, in progress, was excavated on the east bank of Latourell Creek, downslope of NE Latourell Road. The view is towards the north-northeast.

Photo 6. Shovel test ST-1 contained undisturbed native soil, a very fine sandy loam, to the depth of excavation, 53 cm (21 in) below the surface. The view is the north wall profile.

Shovel tests ST-2 through ST-3 exhibited disturbed sandy loam and silt loam soils. Angular cobbles were encountered in shovel tests ST-2 and ST-3, indicating road fill had been placed adjacent to the NE Latourell Road and near the creek, to the northeast of the existing NE Latourell Road Bridge. Non-diagnostic colorless glass (n=2) and whiteware fragments (n=2) were found in shovel tests ST-2 and ST-3 between 0 and 30 cm (0 and 12 in) below the surface (Table 1). The road fill cobbles increased in density with depth in shovel test ST-3. Modern plastic fragments were found throughout shovel test ST-4. No pre-contact or historic-period artifacts were encountered in the shovel tests, and no materials were collected during the excavations.

TABLE 1

RESULTS OF SHOVEL TESTS

Shovel Test No.	Depth of Excavation (cm)	Notes
ST-1	53	
ST-2	52	0 – 10 cm: Non-diagnostic colorless glass fragment (n=1) In road fill
ST-3	50	10 – 20 cm: Non-diagnostic whiteware fragment (n=1) 20 – 30 cm: Non-diagnostic whiteware fragment (n=1); non-diagnostic colorless glass fragment (n=1) In road fill
ST-4	52	0 – 52 cm: Modern plastic fragments

SUMMARY AND RECOMMENDATIONS

AINW has completed a Phase 1 archaeological survey for the NE Latourell Road Bridge Replacement project in Multnomah County, Oregon. The study included a records review, a pedestrian survey, and shovel testing to determine if archaeological resources were present in the project APE.

No pre-contact or historic-period archaeological resources were identified in the project APE. Disturbance from the construction of and modifications to NE Latourell Road is evident within the project APE, except on the banks of the creek in the northern limit of the APE. AINW recommends a finding of "**No Historic Properties Affected**" for archaeological resources for the NE Latourell Road Bridge Replacement project. No further archaeological work is recommended for the project.

Should unanticipated pre-contact or historic-period archaeological resources be encountered during project construction, all ground-disturbing activity near the find(s) should be halted and SHPO promptly notified. If human remains are encountered in any of the excavations, all ground-disturbing activity in the vicinity of the find(s) must be halted immediately and the Oregon State Police, SHPO, the appropriate Indian tribes, and the Commission on Indian Services must be promptly notified, pursuant to ORS 97.745(4).

REFERENCES

Boyd, Robert T., and Yvonne P. Hajda
1987 Seasonal Population Movement Along the Lower Columbia River: The Social and Ecological Context. *American Ethnologist* 14:309-326.

Connolly, Tom
2012 *Archaeological Survey of a Fiber Optic Cable Placement, Larch Mountain Road to Latourell, Multnomah County*. Museum Of Natural & Cultural History, Oregon State Museum of Anthropology Report Number 2012-028. Submitted to Cascade Utilities, dba Reliance Connects, Estacada, Oregon.

Franklin, Jerry F., and C. T. Dyrness
1973 *Natural Vegetation of Oregon and Washington*. Pacific Northwest Forest and Range Experiment Station, U.S. Forest Service, Portland, Oregon.

French, David H., and Kathrine S. French
1998 Wasco, Wishram, and Cascades. In *Plateau*, edited by Deward E. Walker, Jr., pp. 360-377. Handbook of North American Indians, Vol. 12, William C. Sturtevant, general editor. Smithsonian Institution, Washington, D.C.

Friedman, Ralph
1978 *Tracking Down Oregon*. Caxton Printers, Ltd, Caldwell, Idaho.

General Land Office (GLO)
1860 *Plat of Township 1 North, Range 5 East, Willamette Meridian*. Electronic document, http://www.blm.gov/or/landrecords/survey/yPlatView1_2.php?path=PWA&name=t010n050e_001.jpg, accessed July 23, 2019.

Hadlow, Robert W.
2000 National Historic Landmark Nomination for the Historic Columbia River Highway. On file, Oregon State Historic Preservation Office, Salem.

Metsker Maps
1927 *Metsker's Atlas of Multnomah County, Oregon*. Charles F. Metsker, Portland, Oregon, and Tacoma, Washington.

Minor, Rick
2005 Site Form for 35MU124. On file, State Historic Preservation Office, Salem, Oregon.

Nelson, Nancy
2011 Site Form for 35MU219. On file, State Historic Preservation Office, Salem, Oregon.

Oregon Parks and Recreation Department
2019 *Guy W. Talbot State Park*. Electronic document, https://oregonstateparks.org/index.cfm?do=parkPage.dsp_parkPage&parkId=112, accessed July 23, 2019.

Oregon Department of Geology and Mineral Industries (DOGAMI)
2019a Lidar Viewer. Electronic interactive map, https://gis.dogami.oregon.gov/maps/lidarviewer/, accessed August 13, 2019.
2019b Geologic Map of Oregon. Electronic interactive map, https://gis.dogami.oregon.gov/maps/geologicmap/, accessed July 23, 2019.

Palmer, Leonard
1977 Large landslides of the Columbia River Gorge, Oregon and Washington. *Geological Society of America, Reviews in Engineering Geology* III: 69-83.

Pettigrew, Richard M.
1990 Prehistory of the Lower Columbia and Willamette Valley. In *Northwest Coast*, edited by Wayne Suttles, pp. 518-529. Handbook of North American Indians, Vol. 7, William C. Sturtevant, general editor. Smithsonian Institution, Washington, D.C.

Pierson, Thomas C., Russell C. Evarts, and Joseph A. Bard
2016 *Landslides in the Western Columbia Gorge, Skamania County, Washington*. U.S. Geological Survey Scientific Investigations Map 3358, U.S. Department of the Interior. Available, https://pubs.usgs.gov/sim/3358/sim3358_pamphlet.pdf., accessed March 13, 2019.

Prohaska, Sharr
1992 *History of the Development of Bridal Veil, Oregon and the Bridal Veil Lumbering Company*. Cultural Heritage Tourism International Report. Prepared for Multnomah County, Portland, Oregon.

Reese, Jo, John L. Fagan, William F. Willingham, and Bonnie J. Mills
1990 *Report to the Oregon State Historic Preservation Office on Results of the Columbia River Shoreline Archaeological Survey*. The Cultural Heritage Foundation, Portland, Oregon. Submitted to the Oregon State Historic Preservation Office, Salem.

Silverstein, Michael
1990 Chinookans of the Lower Columbia. In *Northwest Coast*, edited by Wayne Suttles, pp. 533-546. Handbook of North American Indians, Vol. 7, William C. Sturtevant, general editor. Smithsonian Institution, Washington, D.C.

Tasa, Guy L., Julia A. Knowles, Marissa A. Guenther, and Christopher L. Ruiz
2007 *Archaeological Resource Evaluation of Area 2, Oregon State Parks, 2006 Surveys. Volume I: Park Surveys.* Oregon State Museum of Anthropology Report No. 2007-050, Museum of Natural and Cultural History, University of Oregon, Eugene, Oregon. Prepared for Oregon State Parks and Recreation Department, Salem.

Topinka, Lyn
2019 Lewis & Clark's Columbia River – "200 Years Later": 'The Dalles and Sandy Wagon Road', Oregon. Electronic document, http://columbiariverimages.com/Regions/Places/the_dalles_sandy_wagon_road.html, accessed August 2, 2019.

U.S. Department of Agriculture, Natural Resources Conservation Service (USDA-NRCS)
1977 *Burlington Series.* Electronic document, https://soilseries.sc.egov.usda.gov/OSD_Docs/B/BURLINGTON.html, accessed July 23, 2019.
2019 *Web Soil Survey*. Electronic database, https://websoilsurvey.sc.egov.usda.gov/App/HomePage.htm accessed July 23, 2019.

U.S. Geological Survey (USGS)
1951 Aerial Reconnaissance Photograph ID# AR1QO0000020033. Available, http://earthexplorer.usgs.gov/metadata/4660/ AR1QO0000020033/, accessed July 23, 2019.
1954 *Bridal Veil, Wash.-Oreg*. 15-minute topographic quadrangle. On file, Archaeological Investigations Northwest, Inc., Portland, Oregon.

Wells, Ray E., Alan R. Niem, Russsell C. Evarts, and Jonathan T. Hagstrum
2009 The Columbia River Basalt Group—From the gorge to the sea. In *Volcanoes to Vineyards: Geologic Field Trips through the Dynamic Landscape of the Pacific Northwest. Geological Society of America Field Guide 15*, edited by Jim E. O'Connor, Rebecca J. Dorsey, and Ian P. Madin, pp. 737–774. The Geological Society of America, Boulder, Colorado.

Zenk, Henry, Yvonne Hajda, and Robert Boyd
2016 Chinookan Villages of the Lower Columbia. *Oregon Historical Quarterly,* Vol. 117, No.1, pp. 6-37.

Report #

SHPO Use

Year: 2019

State Historic Preservation Office Report Cover Page

Title: Historic Resource Baseline Report for the NE Latourell Road Bridge Replacement, Multnomah County, Oregon

REPORT

Author(s): Samantha Gordon and Judith A. Chapman

Agency/Client: Archaeological Investigations Northwest, Inc. (AINW)

District/Contractor: Parametrix, Inc.

Agency/Client Report#: AINW Report No. 4264 Project Acres: 0.75 Survey Acres: 0.75

LOCATION

County(ies): Multnomah

Township:		Range:		Section(s):	Township:		Range:		Section(s):
1	N	5	E	29					

TESTING

Archaeological Permit Number(s): Accession Number:

Reports submitted to: Tribes: ☐ UOMNCH: ☐ LCIS: ☐ Curation:

Report Addresses Testing: ☐

CONSULTATION

Have tribes been contacted or consulted? List tribes:

List any other groups contacted or consulted:

PA/ MOA

Report is associated with: PA ☐ MOA ☐

REPORTS WITHOUT A COMPLETE AND ACCURATE COVER PAGE AND APPROPRIATE ADDITIONAL PAGES MAY BE RETURNED. CHECK THE SHPO WEBSITE TO MAKE SURE YOU HAVE THE MOST CURRENT VERSION.

Report #

SHPO Use

State Historic Preservation Office Report Summary of Resources and NRHP Eligibility

RESOURCES

	Archaeological: Site:	Isolate:	Built Environment:	TCP:	HPRCSIT:	Other:
Count:	0	0	3	0	0	

***Please be sure all archaeological forms have been submitted on-line**

EVALUATE PROPERTIES UNDER ALL FOUR CRITERIA.
BE SURE TO INCLUDE JUSTIFICATION IN THE REPORT

NRHP ELIGIBILITY

Oregon On-Line Form #:	Trinomial:	Temp# or Name:	Criterion A:	Criterion B:	Criterion C:	Criterion D:
		Latourell Creek Br	Not Eligible	Not Eligible	Not Eligible	Not Eligible
		Guy W. Talbot Sta	Eligible	Unevaluated	Unevaluated	Unevaluated
		NE Latourell Road	Not Eligible	Not Eligible	Not Eligible	Not Eligible

HISTORIC RESOURCE BASELINE REPORT FOR THE NE LATOURELL ROAD BRIDGE REPLACEMENT MULTNOMAH COUNTY, OREGON

Prepared For
Parametrix, Inc.
Portland, Oregon

September 5, 2019

REPORT NO. 4264

Archaeological Investigations Northwest, Inc.

3510 NE 122nd Ave. ● Portland, OR ● 97230 Phone 503 761-6605 ● Fax 503 761-6620

PROJECT SUMMARY INFORMATION

PROJECT NAME: NE Latourell Road Bridge Replacement

LOCATION: Latourell, Multnomah County, Oregon

Township	Range	Section
1 North	5 East	29

USGS QUAD: *Bridal Veil, OR-WA,* 7.5-minute, 2017

COUNTY: Multnomah

PROJECT: Replacement of the existing NE Latourell Road Bridge on NE Latourell Road with a new bridge structure on the existing alignment.

FINDINGS: **Three historic resources were identified within the project's Area of Potential Effects (APE).**

- The 1968 NE Latourell Road Bridge is recommended to be *not eligible* for listing in the National Register of Historic Places (NRHP).
- The project is in Guy W. Talbot State Park. The park has not been formally evaluated but is recommended *eligible* for listing in the NRHP. No contributing historic buildings, structures, landscape features, or objects associated with the park are within the project APE.
- NE Latourell Road is recommended to be *not eligible* for listing in the NRHP.

RECOMMENDATIONS:

- Construction of the NE Latourell Bridge Replacement project will have a "no adverse effect" on the NE Latourell Road bridge and NE Latourell Road since they are not eligible for listing in the NRHP. No further work for these two resources is recommended.
- The preparation of Determination of Eligibility (DOE) and Finding of Effect (FOE) forms for Guy W. Talbot Park, a potentially NRHP-eligible resource, is recommended for agency review and comment.
- Due to a use of a state park property, a Section 4(f) assessment under the U. S. Department of Transportation Act of 1966 is recommended for Guy W. Talbot Park if federal funding is acquired through the Federal Highway Administration. Since there is no federal funding involved in this project, no assessment is needed.

PREPARED BY: Samantha Gordon, M.S., Architectural Historian, and Judith A. Chapman, M.A., R.P.A., Senior Archaeologist/Architectural Historian

PROJECT DESCRIPTION

Multnomah County proposes to replace the NE Latourell Road Bridge on NE Latourell Road in the unincorporated community of Latourell, Multnomah County, Oregon (Figure 1). The project plans to remove the existing 1968 bridge (Photo 1) and build a new bridge on the existing alignment. The current NE Latourell Road Bridge is an important road transportation link for local residents in the Latourell community and it provides recreational access to the area. However, the bridge has reached the end of its design life and has deteriorated beyond repair. The structure will be replaced to maintain a safe crossing of the Latourell Creek.

The project Area of Potential Effect (APE) comprises the NE Latourell Road right-of-way, the existing NE Latourell Road Bridge, and land within Multnomah County and Guy W. Talbot State Park (Figure 2). The project is within Section 29, Township 1 North, Range 5 East, Willamette Meridian. The project is in the Special Management Area of the Columbia River Gorge National Scenic Area.

The project will be funded through the State Funded Local Projects (SFLP) fund exchange. A joint permit from the U.S. Army Corps of Engineers and Department of State Lands will be needed for the project. Therefore, the project must comply with Section 106 of the National Historic Preservation Act (NHPA) and its implementing regulations, 36 CFR 800, in addition to Section 4(f) of the U.S. Department of Transportation Act and its implementing regulations, 23 CFR 774. The project was also done to meet state requirements under ORS 358.653, which applies to public properties that are significant and negatively affected by a project.

Archaeological Investigations Northwest, Inc. (AINW), has completed this historic resource baseline survey to identify historic properties that have the potential to be affected by the project. The work was conducted and reviewed by AINW architectural historians who meet the professional qualifications of the Secretary of the Interior's Standards and Guidelines for Architectural History and History, and who are Oregon Department of Transportation (ODOT) qualified as Cultural Resource Consultants in Architectural History.

Photo 1. The 1968 NE Latourell Road Bridge will be removed. The view is towards the southwest.

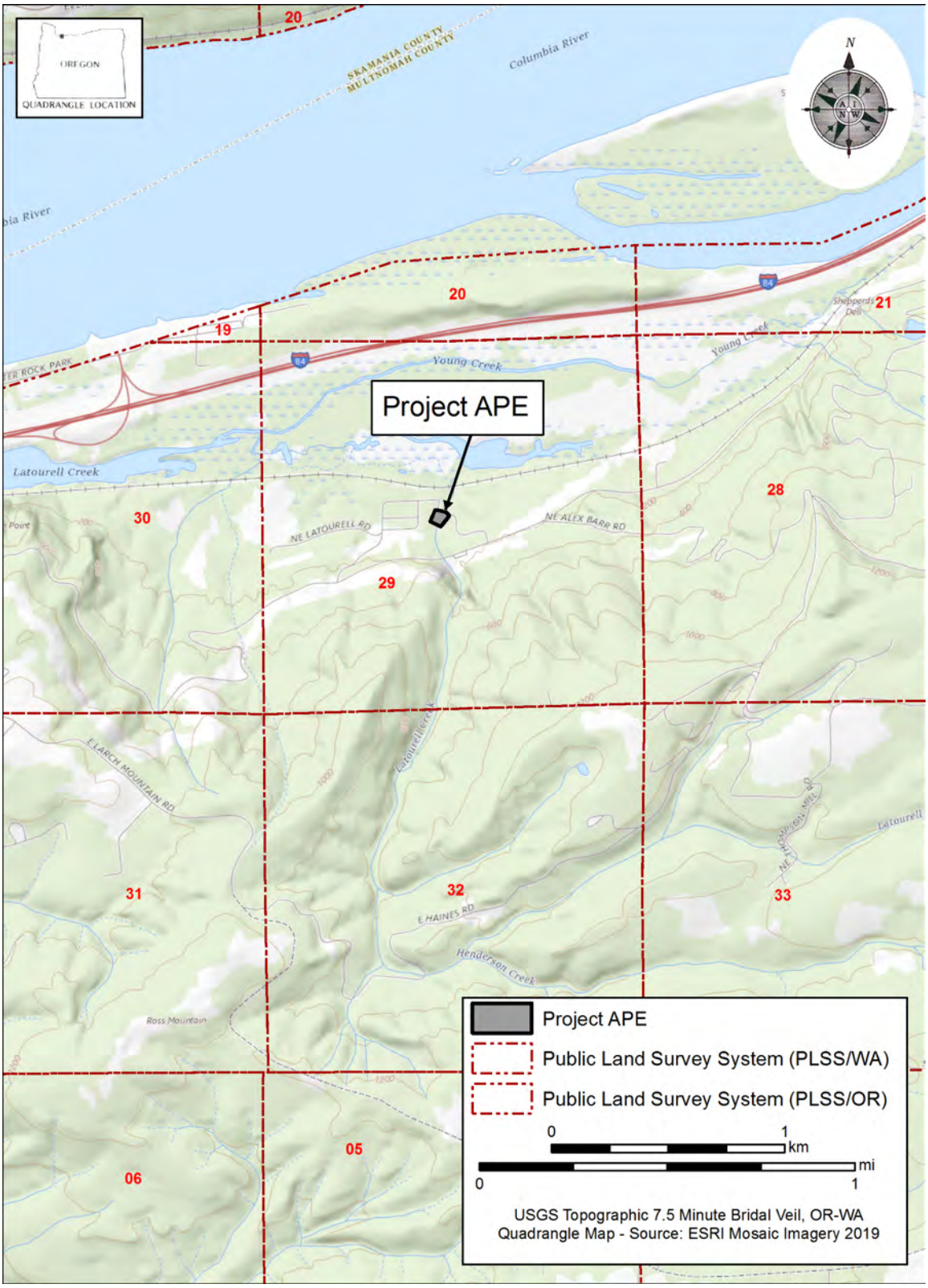

Figure 1. The NE Latourell Road Bridge Replacement project is in Multnomah County in the Columbia River Gorge.

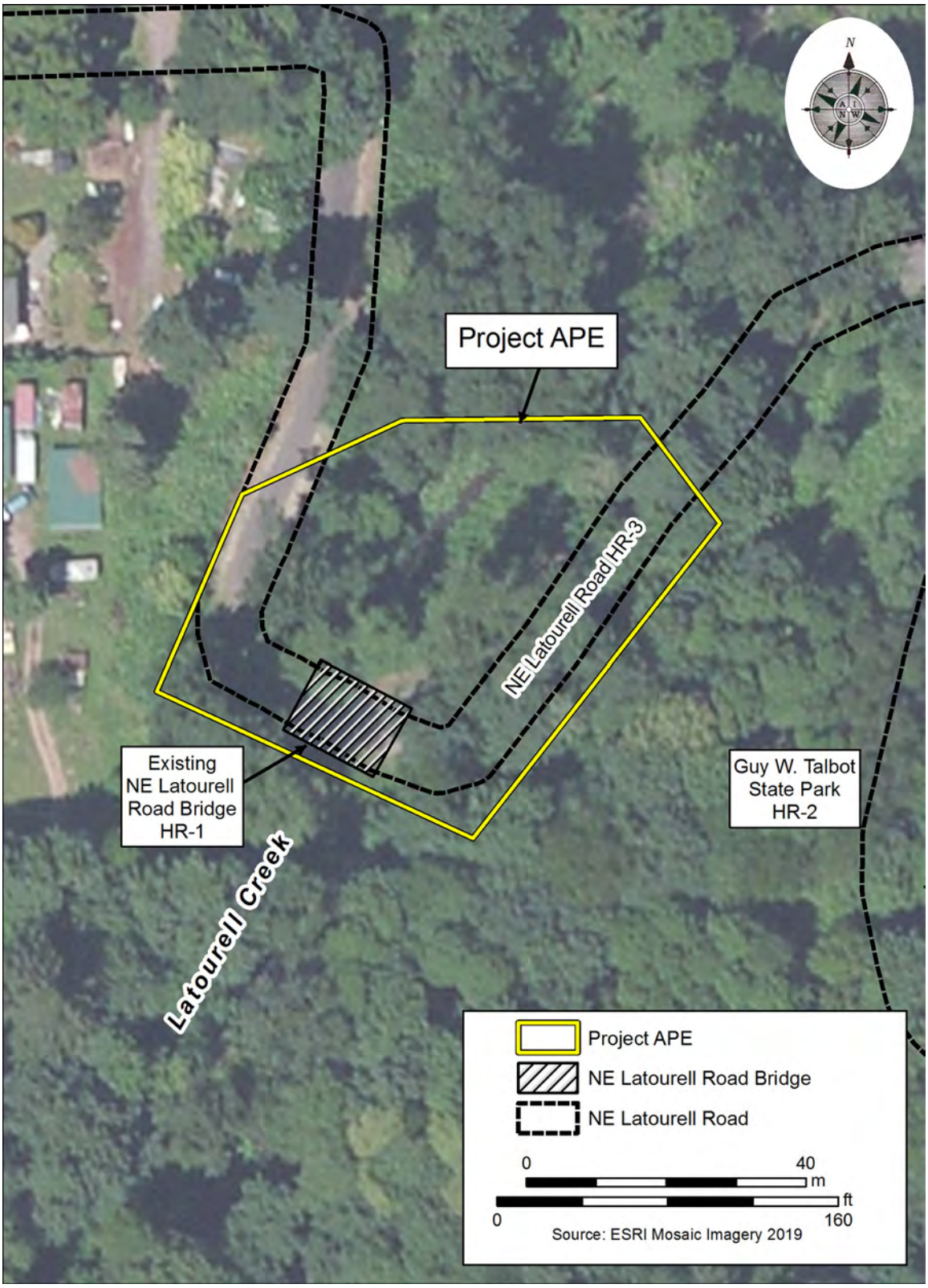

Figure 2. The historic resources were identified within the APE for the NE Latourell Road Bridge Replacement project.

EXISTING CONDITIONS

AINW has completed a review of records on file with the Oregon State Historic Preservation Office that are made available through the Oregon Historic Sites Database. The database includes historic resource documents from the Multnomah County Cultural Resource Inventory. This data was used to identify previously documented historic resources within the APE and in the broader project area. The Oregon Parks and recreation department was consulted for information on Guy W. Talbot State Park and the Historic Columbia River Highway (HCRH).

A review of historical records, including maps, land patents, and historical photographs, has also been completed to further identify historical themes of development within the project area and its vicinity. Synthesis of this information provides a general historical context for the area highlighting important events, people, and elements of the built environment that have shaped existing conditions.

There are no individual previously documented historic resources in the APE. The project is within Guy W. Talbot State Park, which has elements listed as historic/contributing features to intact segments of the HCRH and were included in a National (Register) Historic Landmark District designation (Hadlow 2000). Previously, in 1983, the HCRH was listed in the National Register of Historic Places (NRHP) as a historic district (Smith 1983). The HCRH is also a National Scenic Byway and a National Historic Civil Engineering Landmark.

For the NHL nomination, the Latourell Falls Overlook and parking lot were evaluated as contributing resources to the HCRH using cultural landscape criteria based on spatial organization, circulation, and topography, and on the types of existing structures and objects. NE Latourell Road intersects the HCRH and was improved as an access road at the same time as Columbia River Highway construction. The acclaimed 1913 Latourell Bridge on the HCRH is within the park, although the 1913 bridge and Latourell Falls are not within the APE. A linear landscape study of a segment of the HCRH (*Cultural Landscape Inventory: Shellrock Mountain to Ruthton Point*) is near but does not include Guy W. Talbot State Park (Davison and Knapp 2010).

The Guy Webster and Geraldine Talbot House and Garage/Carriage House (both 1912), and the stairs and stone walls around these buildings, are within the Guy W. Talbot State Park. They are listed as eligible/significant historic resources in the Oregon Historic Sites Database. The Talbot House resource, as a component of Guy W. Talbot State Park, is included in the "Oregon State Parks – Heritage Parks" grouping in the Oregon Historic Sites Database. The Guy W. Talbot Landmark bronze plaque (1939) mounted on a boulder is also in the park and listed in the database. The plaque commemorates Talbot's gift of Latourell Falls to the state in 1914 as a viewpoint on the new Columbia River Highway. The Talbots also presented a gift of 125 acres of land that became the state park in 1929 (Oregon Parks and Recreation Department [OPRD] 2019a).

The Henry and Lizzie Latourell House at the intersection of Fall Street and Latourell Street in the town of Latourell is listed as eligible/contributing in the Oregon Historic Sites Database (OPRD 2019a).

HISTORICAL OVERVIEW

The Latourell area was first surveyed in 1860 when a Latourell house and surrounding field were drawn on the 1860 General Land Office map in Sections 29 and 30 (General Land Office [GLO] 1860). A Land Patent map shows that Joseph Latourell staked a Homestead Act claim at this location in 1875 (Bureau of Land Management [BLM] 1875). In 1870, John Campo was issued a patent for a 160-acre Homestead Act claim in Section 29 adjacent to Latourell's claim (BLM 1870). Information on John Campo was not located and it is unknown whether he improved his section of land. Other Latourell family members claimed land adjacent to the Joseph Latourell claim.

The townsite of Latourell, sometimes spelled "Latourelle" in older sources, was established along the 1880 Oregon Railway & Navigation Company (OR&N) rail line by Joseph Latourell and his wife, Grace Latourell, née Ough, next to his homestead farm. Joseph Latourell was a farmer, merchant, and telegraph operator and lineman. Joseph Latourell was also the town's second postmaster (McArthur 1992:495; U.S. Postal Service 1876).

Latourell's economy was mainly driven by logging and a lumber mill on the Columbia River (Gresham Historical Society 1998:88-91). The community of Latourell became the social center for the surrounding countryside. A school with a second story dance hall, a creamery and cheese factory, and several buildings and houses made up the small town. The name of the town was changed to Latourell Falls in 1887 (OHS 1918:78; Topinka 2019). According to an information sign placed at the town of Latourell in 2014:

> In the early 1880s Latourell was a hard-working timber town by day where logger's spike-soled boots called "calks" or "corks" were common footwear. But heavy boots came off at night as locals kicked up their heels to dance the night away. Merrymaking was a way of life in Latourell. The town was named for Joseph "French" Latourell who arrived in Oregon during the 1850s. He married Grace Ough, an American Indian, in 1859 and together they raised eight children. Frenchy ran a mercantile, served as postmaster in 1887, operated a fishwheel, and worked as a boatman on the Columbia River. The Latourells were known to their neighbors as both industrious and "colorful". Industry aside, it was their zest for life, music, and hospitality that endeared the Latourells to their neighbors. Frenchy was a fiddler who loved to play, sing, dance, and dine with friends until the wee hours. Several Latourell children also played musical instruments. Word spread quickly, and visitors from Portland flocked to town by steamboat. Soon, Latourell boasted five saloons and a well-tuned brass band.

The town was on the route of The Dalles and Sandy Wagon Road, the first continuous road through the Columbia River Gorge (Davison and Knapp 2010:7, 13). The road was known for its steep grade and sharp turns (*The Oregon Daily Journal* 1912c). Much of the road was washed away in flooding or used as grade for the 1880 OR&N line through the Columbia Gorge. Other segments remained in use for construction of the Columbia River Highway. When various sections of the railway alignment were later moved closer to water grade, the old rail line was used for much of the route of the scenic highway (Davison and Knapp 2010:7; *The Oregonian* 1913). The Columbia River Highway was constructed

between 1913 and 1922 as the first scenic highway in the United States. The highway's iconic sweeping curves were designed partially in response to limitations imposed by topography and by the existing OR&N railroad right-of-way (Lancaster 1916 (2004):102).

The alignment of NE Latourell Road within the vicinity of the project is likely the grade from a section of the The Dalles and Sandy Wagon Road (Langille 1940). A newspaper article notes that the road was surveyed in 1912 (*The Oregon Daily Journal* 1912a), indicating it was planned for improvement as a Multnomah County Road leading in and out of the community of Latourell with a connection to the Columbia River Highway. The construction of the segment of Columbia River Highway between Latourell and Bonneville was announced in late 1912 and built in 1913 (*The Oregon Daily Journal* 1912b, 1913).

The project APE is within a portion of the former summer estate of Guy Webster Talbot, a Portland businessman, railroad entrepreneur, and utility company executive who was the president of the Pacific Power & Light Company and the Portland Gas & Coke Company (Carey 1922:564, 567; *The Oregonian* 1961). The Talbot family donated a portion of their land containing Latourell Falls to the state in 1914 during construction of the Columbia River Highway (OPRD 2019b; *The Oregon Daily Journal* 1914). The park was established later, in 1929, when the Talbot family donated their 125-acre summer estate to the state for the development of a park along the Columbia River Highway. The land was the first tract in Multnomah County to be obtained for a State Park and once improved, it became popular with Portland groups for weekend outings (Langille 1940).

Guy W. Talbot State Park was expanded to 378 acres by various purchases and donations through 1984 (Figure 3). Between 1933 and 1935, "a car parking area, picnic area, tables, stoves, water, trails, two cottages, and sanitary facilities" were constructed in the park by the Civilian Conservation Corps (CCC) (Armstrong 1965). A plaque dedicated to the memory of the Talbots was placed near the picnic area in 1939 by family friends, and a plaque near the northeast corner of the picnic area was installed in 1941 by the Bridal Veil Pioneer Association in memory of Bridal Veil Pioneers (Armstrong 1965). Guy W. Talbot State Park includes Latourell Falls, the 1913 NE Latourell Road Bridge on the HCRH, and land on either side of the historic highway.

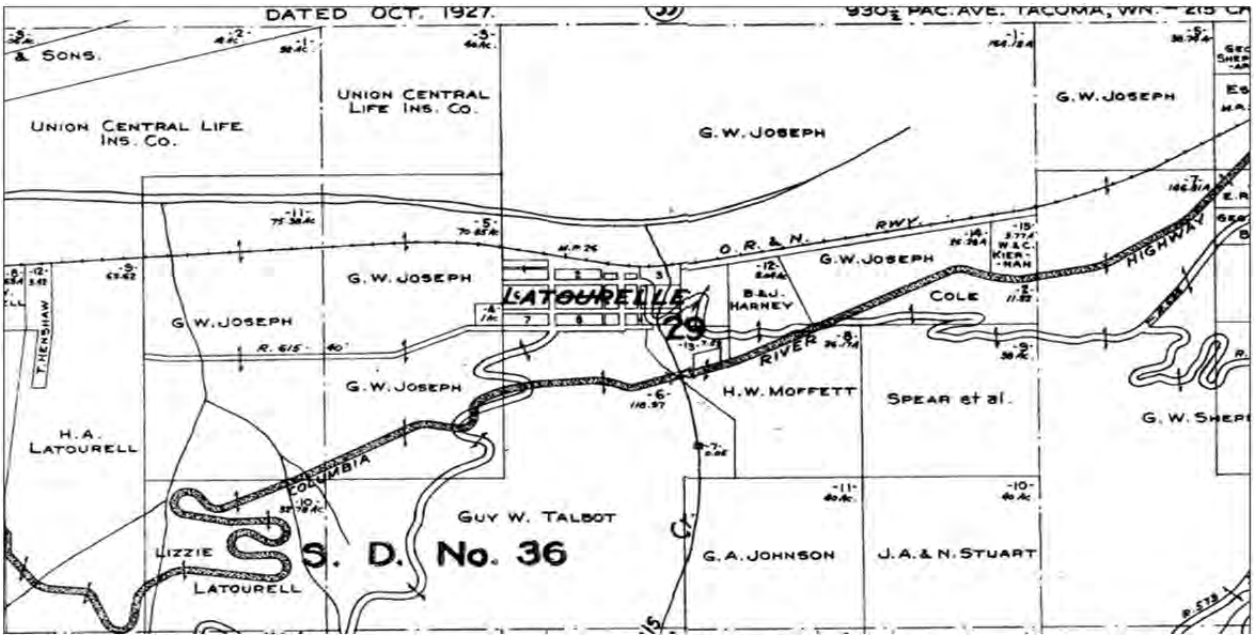

Figure 3. The 1927 map depicts the Latourell town plat, Guy W. Talbot State Park, surrounding land claims, and alignments of Latourell Road, OR&N Railway, and the Columbia River Highway (Metsker Maps 1927).

SURVEY METHODS AND RESULTS

Survey Methodology

The historic resource baseline survey was conducted on July 15, 2019, by AINW Senior Architectural Historian Andrea Blaser, M.S., and AINW Architectural Historian Samantha Gordon, M.S. For the purpose of this survey, historic resources are defined as buildings, structures, sites, and objects that were constructed at least 45 years before the date of survey (i.e., in or before 1974) and are located on parcels impacted by the NE Latourell Bridge Replacement project. Although a historic resource is generally 50 years in age before it is considered eligible for listing in the NRHP, this survey held to a 45-year minimum age to ensure that resulting data would remain relevant throughout the project planning and construction phase.

Three historic resources were identified. Each historic resource was photographed to capture its current context and character-defining features, and notes were taken to document physical characteristics, integrity, and details of each resource. Landscape features were similarly documented in order to evaluate the potential of historic resources within the project area to contribute to a historic district or cultural landscape. During evaluation for NRHP significance, a resource is eligible if it relates to any one or more of the following four aspects of American history:

(A) association with historic events or activities,
(B) association with an important person in history,
(C) distinctive design or physical character, or
(D) potential to provide important information about prehistory or history.

To be significant, a property also needs to retain integrity, which means it must maintain enough of the original qualities and characteristics that make it significant. These qualities of integrity include location, design, setting, materials, workmanship, feeling, and association.

Survey and Evaluation Results

Three historic resources were identified as a result of survey. The historic resources include the 1968 bridge, with older concrete wing walls and abutments; Guy W. Talbot State Park (1929); and NE Latourell Road (surveyed and improved circa 1913-1915). A brief description and recommendation of NRHP eligibility is provided for each historic resource. Table 1 provides a summary of this information along with representative photographs. This table is sequentially organized by the AINW field number (HR-#) assigned to each resource at the time of the survey. The locations of the three historic resources are on Figure 2.

NE Latourell Road Bridge (HR-1)

The wood and concrete bridge spanning Latourell Creek was constructed in 1968 by Multnomah County, according to ODOT bridge records (Photos 2 through 5). The bridge will be removed and replaced with a new bridge on the existing alignment (see Figure 2). As-built plans of the 1968 bridge that were drawn in 1989 are shown in Figure 4. The bridge is on a hairpin turn on NE Latourell Road, which is a narrow, single-lane road that provides access to the community of Latourell from the HCRH.

Photos 2 and 3. NE Latourell Road Bridge (1968) overview, facing west (left). Older concrete wing walls on the north elevation (right).

Photos 4 and 5. North elevation showing board-formed concrete wing wall, looking southeast (left). Timber stringers on older concrete abutment (right).

The bridge guardrails have both lumber and pressure-treated horizontal wooden rails mounted on vertical timber posts with timber stringers supporting the timber deck planks. The bridge deck today consists of pressure-treated wood boards that are paved with asphalt. The substructure consists of poured concrete abutment and wing walls that appear to pre-date the railing and deck and may be from a previous bridge in this location. The bridge probably replaced a former bridge that had been on-site since at least 1913. Replacement of this bridge may have occurred circa 1920-1930 and the concrete abutments may date to that period. The concrete wing walls are board-formed and taper as they extend outward at a 45-degree angle from the bridge. Metal support braces are between the pressure-treated wood stringers. A metal guard rail is located at the southeast bridge quadrant.

NE Latourell Road Bridge (1968) is recommended to be *not eligible* for listing in the NRHP. The bridge is a standard design that does not meet NRHP Criterion C as it does not embody distinctive characteristics of a type, period, or method of construction; it is not the work of a master; and it does not exhibit high artistic value. It is a replacement bridge, although some of the concrete foundation components may date from an earlier period. In addition, the bridge does not retain a high level of integrity as many wood components have been replaced with pressure-treated members.

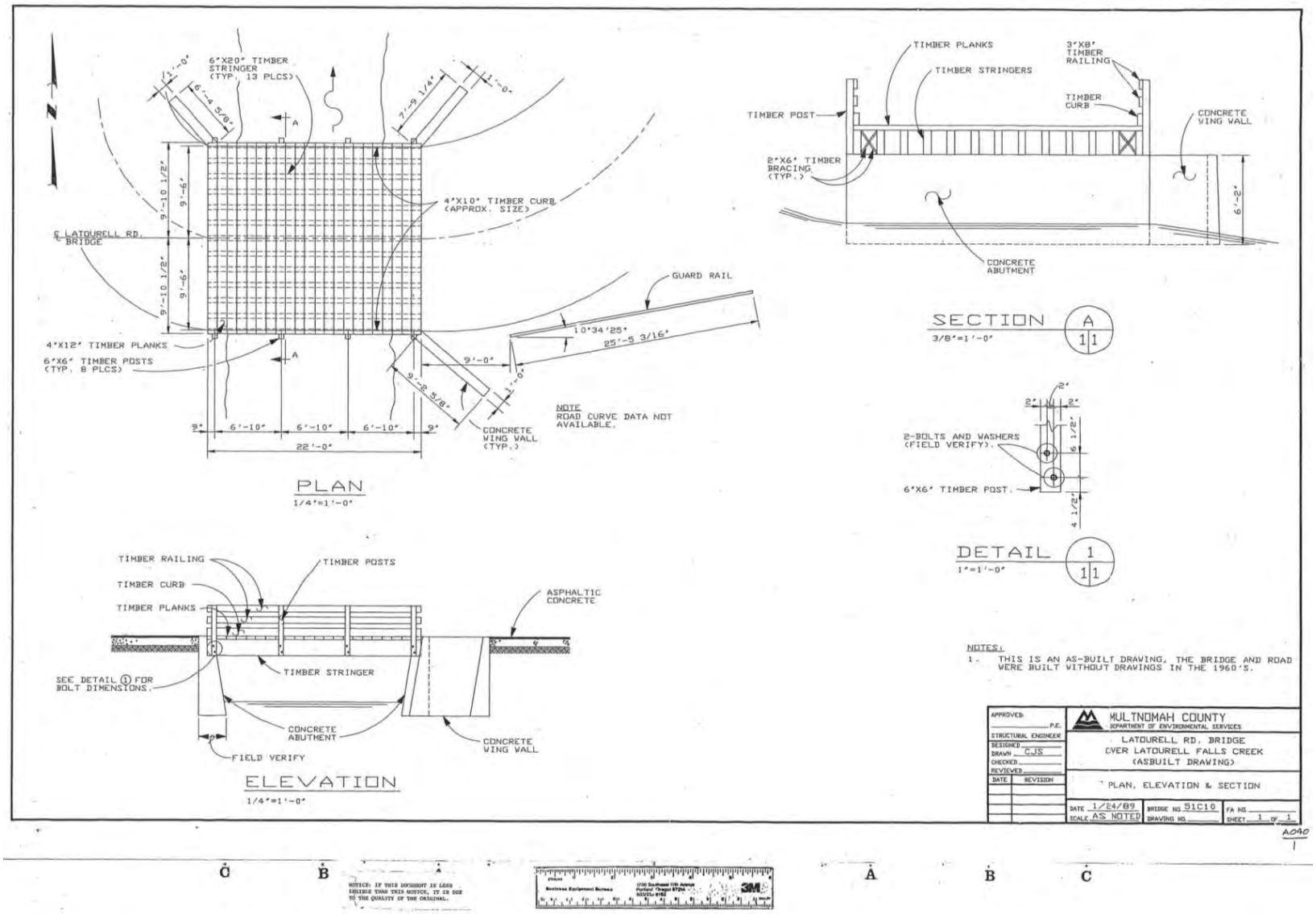

Figure 4. The 1989 as-built plan depicts the appearance of the NE Latourell Road Bridge as constructed in 1968 (drawing on file, Multnomah County, Oregon).

Guy W. Talbot State Park (HR-2)

The project area is in Guy W. Talbot State Park, which was established in 1929 along the Columbia River Highway as Multnomah County's first state park (Figure 5). The bridge project is within the park; however, no historical objects, buildings, structures, or landscape features associated with the park are within the project APE. Several features including rustic foot bridges, guard rails, stone fireplaces, tables, and trails were built by the CCC between 1933 and 1935. Also in place at that time were landscaped park areas, a caretaker's dwelling, outbuildings and a water system. Modern structures in the park include a covered picnic area, restroom facilities, wooden picnic tables and benches, stone fencing, and modern signs (Photos 6 and 7).

The state park system was closely associated with transportation history and the Highway Commission in Oregon. Although not a designed park associated with a particular landscape design philosophy, the Guy W. Talbot State Park is an early example of a park commissioned to accompany scenic highway touring. Also notable are the timber and stone picnic facilities built by CCC enrollees to compliment the landscape and showcase the CCC's craftsmanship. Rustic architectural designs are associated with the New Deal programs that were implemented to lift the nation out of the Great Depression in the 1930s by providing work in state and national parks. The CCC program was under technical supervision of the National Park Service, which furnished plans and layouts for all projects and the local agency furnished the materials (Armstrong 1965).

Guy W. Talbot State Park is recommended to be eligible for listing in the NRHP as an individual resource and as a component of the "Oregon State Parks – Heritage Parks" grouping identified in the Oregon Historic Sites Database. The park is recommended to be eligible under Criterion A for its association with Oregon State Park history (1913-1963), the development of the HCRH (1913-1922), and for its park infrastructure built by the CCC in the 1930s. The park is significant as the first designated state park in Multnomah County. The Latourell Falls overlook from the HCRH and the reinforced-concrete, deck-arch Latourell Bridge built in 1913 are eligible/contributing features to the HCRH National Landmark. Determination of Eligibility (DOE) and Finding of Effect (FOE) forms are recommended for the park. The forms will establish the NRHP-eligibility of the park and whether the effect on the park by the project will be adverse. A "no adverse effect" is anticipated. If federal funding is obtained, the park is recommended to be analyzed under Section 4(f) of the U. S. Department of Transportation Act.

Photos 6 and 7. Modern picnic area, facing west (left). Stonework drinking fountain, facing south (right).

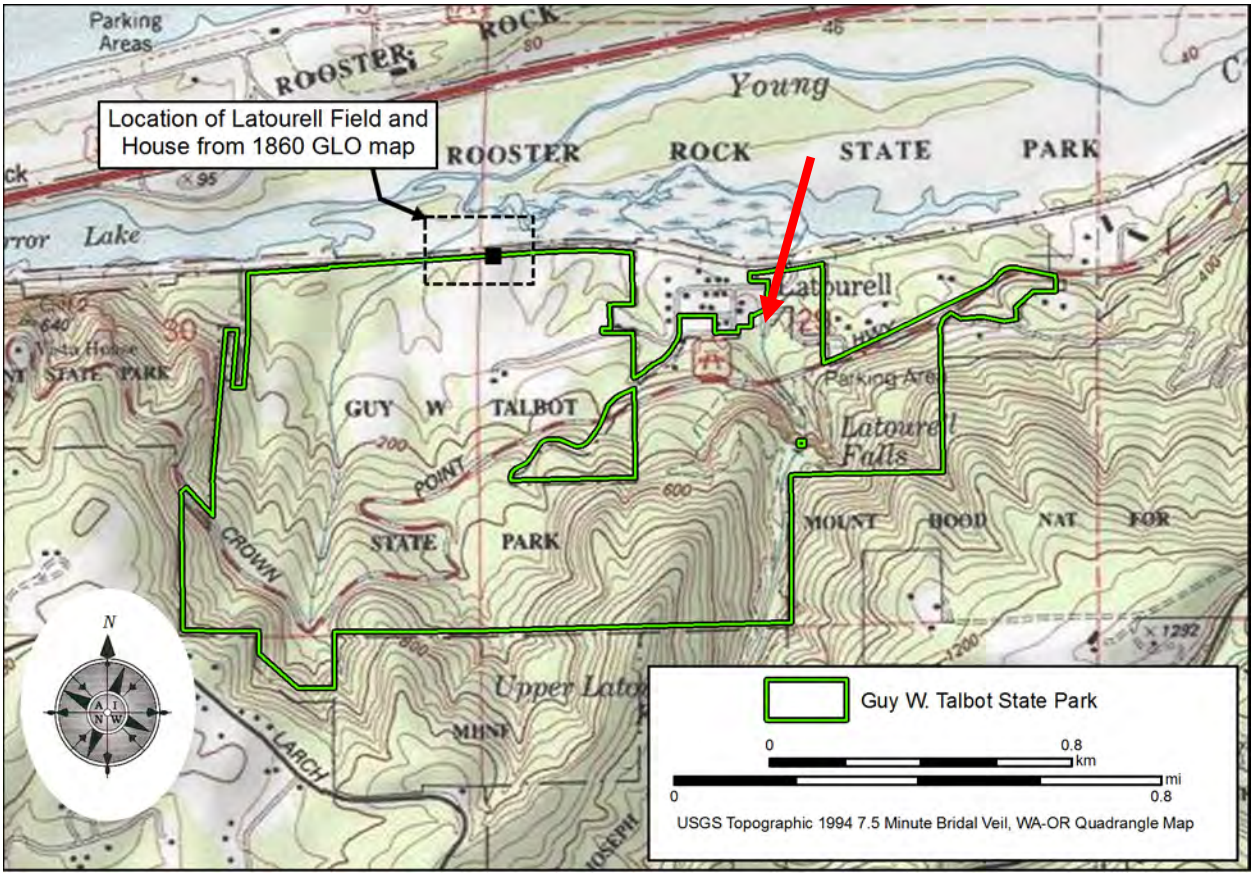

Figure 5. The NE Latourell Road Bridge is within the boundary of Guy W. Talbot State Park (Map provided by Oregon Parks and Recreation Department, Salem). Project area at arrow.

NE Latourell Road (HR-3)

NE Latourell Road is a narrow, winding road that may be a modified segment of the former The Dalles and Sandy Wagon Road (Connolly et al. 2013; Langille 1940). The roadway was re-surveyed and upgraded in circa 1913-1915 for a connection to the new Columbia River Highway. The asphalt-paved road remains today in the original early 1900s alignment as a single-lane thoroughfare within a wooded setting (Photos 8 and 9). The road alignment does not appear to have been altered since the historic period, based on a review of historical maps.

NE Latourell Road is recommended to be *not eligible* for listing in the NRHP. No historical mileposts, signs, or other road features are evident along its route. The road is paved with standard modern asphalt and it does not retain engineering features or aesthetic qualities that would mark it as an exceptional example of a rural road under Criterion C. Although the roadway retains most aspects of integrity, it does not meet NRHP eligibility requirements. No further historic resource work is recommended for the road.

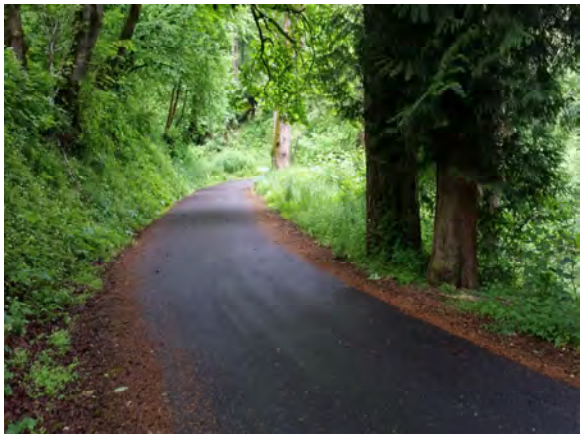

Photos 8 and 9. Section of NE Latourell Road, facing north (left). Section of NE Latourell Road, facing southeast (right).

RECOMMENDATIONS

AINW has completed a historic resources baseline survey for the NE Latourell Road Bridge Replacement project in the unincorporated community of Latourell in Multnomah County (Table 1; Figure 2). The survey was conducted by AINW Secretary of the Interior- and ODOT-qualified architectural historians. The following are recommendations to complete the Section 106 of the NHPA review process and to conduct a Section 4(f) analysis for the NE Latourell Road Bridge Replacement project.

- The NE Latourell Road Bridge (1968) (HR-1) is recommended to be *not eligible* for listing in the NRHP. The bridge lacks engineering distinction and is a common type and style. No further historic resource work is recommended for the bridge.

- Guy W. Talbot State Park (HR-2) is recommended to be eligible for listing in the NRHP. The park is associated with state park history and the CCC. Preparation of a DOE for the park focusing on these contexts and for its role as a historic/cultural landscape within the context of the HCRH is recommended. This will establish the NRHP eligibility of the park and identify elements that may be affected by the project. An FOE is recommended to determine the level of effect the project will have on the historic park property.

- There is no federal funding from the Federal Highway Administration for the project. If federal funds are later acquired, a Section 4(f) evaluation under the Department of Transportation Act of 1966 is recommended for Guy W. Talbot State Park. The bridge replacement and road realignment will occur on park property, constituting a use of a historic property under Section 4(f). No historic objects or structures associated with the park are within the project APE, and no contributing landscape features will be affected by the bridge replacement. Therefore, it is recommended that the project will likely have a minor impact on the historic park. A Section 4(f) de Minimis finding in the FOE may suffice. At this time, no assessment under Section 4(f) is needed.

- NE Latourell Road (HR-3) is recommended to be *not eligible* for listing in the NRHP. The road has modern asphalt surfacing and does not exhibit historical roadway features or engineering qualities that would make it significant. No further historic resource work is recommended for the road.

REFERENCES

Armstrong, Chester H.
1965 History of the Oregon State Parks: 1917-1963. State of Oregon, Oregon State Parks. Electronic document, http://npshistory.com/publications/oregon/history/contents.htm, accessed 12 July 2019.

Bureau of Land Management (BLM)
1870 *Land Patent for John Campo*. Electronic document, https://glorecords.blm.gov/details/cdi/default.aspx?doc_id=1437165&sid=bj1tdykh.xby, accessed July 10, 2019.
1875 *Land Patent for Joseph C. Latourell*. Electronic document, https://glorecords.blm.gov/details/cdi/default.aspx?doc_id=1437167&sid=a4sbqmcv.2up, accessed July 10, 2019.

Carey, Charles H.
1922 *History of Oregon*. 3 vols. The Pioneer Historical Publishing Company, Chicago, Illinois.

Connolly, Thomas J., Julia A. Knowles, and Christopher L. Ruiz
2013 *The Dalles to Sandy River Wagon Road, Through the Columbia River Gorge, Oregon: An Inventory Evaluation*. University of Oregon Museum of Natural and Cultural History, Eugene, Oregon.

Davidson, Danae, and Barbara Knapp
2010 *Cultural Landscape Inventory: Shellrock Mountain to Ruthton Point, Historic Columbia River Highway*. Prepared for Oregon State Department of Transportation, Salem.

General Land Office (GLO)
1860 *Plat Map of Township 1 North, Range 5 East, Willamette Meridian*. Electronic document, https://glorecords.blm.gov/details/survey/default.aspx?dm_id=350690&sid=rxpz3ymy.aji, accessed July 10, 2019.

Gresham Historical Society
1998 *A Pictorial History of East Multnomah County*. Pediment Publishing, Portland, Oregon.

Hadlow, Robert W.
2000 Columbia River Highway Historic District, Multnomah County, Oregon, National Historic Landmark ID #83004168.

Lancaster, Samuel Christopher
1916 (2004) *The Columbia, America's Great Highway Through the Cascade Mountains to the Sea.* Originally published, 1916, S. C. Lancaster, Portland. Schiffer Publishing, Atglen, Pennsylvania.

Langille, W.A.
1940 *State Parks of the Columbia Gorge*. On file, Oregon State Archives, State Library of Oregon, Salem.

McArthur, Lewis A.
1992 *Oregon Geographic Names*. 6th ed. Oregon Historical Society, Portland.

Metsker Maps
1927 *Metsker's Atlas of Multnomah County, Oregon*. Charles F. Metsker, Portland, Oregon, and Tacoma, Washington.

Multnomah County
1989 Latourell Rd. Bridge Over Latourell Falls Creek (As Built Drawing). Multnomah County Department of Environmental Services. On file, Multnomah County.

Oregon Historical Society (OHS)
1918 News and Comment: Latourell Falls. *Oregon Historical Quarterly,* Volume 19, No. 1.

Oregon Parks and Recreation Department (OPRD)
2019a Oregon Historic Sites Map. Electronic document, http://maps.prd.state.or.us/histsites/historicsites.html, accessed 10 July 2019.
2019b Guy W. Talbot State Park. Electronic document, https://oregonstateparks.org/index.cfm?do=parkPage.dsp_parkPage&parkId=112, accessed 12 July 2019.

Smith, Dwight A.
1983 Columbia River Highway Historic District, Multnomah County, Oregon, National Register #83004168.

The Oregon Daily Journal (Portland, Oregon)
1912a Board for instrument men making survey Latourelle Road. 20 July:10.
1912b County To Construct Fifteen Mile Link in Columbia Canyon Road At Once, The Work To Cost $100,000. 27 November:1.
1912c Shell Rock Road Work Is Planned. 12 March:11.
1913 Scenic Highway Up Columbia to be Built At Once. 21 July:1, 7.
1914 Latourelle Falls Is Presented To Oregon by Guy W. Talbot. 1 March:2.

The Oregonian (Portland, Oregon)
1961 Guy W. Talbot Succumbs at 88 after Life in Rail, Utility Work. 2 December:9.

Topinka, Lyn
2019 *'The Dalles and Sandy Wagon Road', Oregon*. The Columbia River "A Photographic Journey." Electronic document, http://columbiariverimages.com/Regions/Places/the_dalles_sandy_wagon_road.html, accessed July 10, 2019.

U.S. Postal Service
1876 Records of the Appointment of Postmasters, 1832-1971. NARA Microfilm Publication, M841, Roll 495. Records of the Post Office Department, Record Group Number 28. National Archives, Washington, D.C.

TABLE 1

HISTORIC RESOURCES IDENTIFIED

AINW ID	Historic Name Address	Resource Description	General Comments	Integrity	NRHP Status and Recommendations	Photograph(s)
HR-1	**LATOURELL CREEK BRIDGE** NE Latourell Road	• 1968 Bridge Structure • Single span bridge • Wood railings, subdeck, and stringers • Concrete wing walls and abutments	Decking and rails were constructed in 1968. The bridge's concrete abutments may date to earlier bridge construction. Common post and rail bridge type that lacks engineering distinction.	Retains integrity of location, design, setting, and association	Not Eligible / Non-Contributing Does not embody distinctive characteristics of a type, period, or method of construction under Criterion C No Effect No further work recommended	

TABLE 1, continued

AINW ID	Historic Name Address	Resource Description	General Comments	Integrity	NRHP Status and Recommendations	Photograph(s)
HR-2	**GUY W. TALBOT STATE PARK** 41613 Historic Columbia River Highway	• 1929 State Park • Rustic, Utilitarian • Field stone, concrete, T1-11, metal sheet	Multnomah County's first state park has several historic and modern buildings, structures, landscape features, and objects. Some picnic furnishings were constructed by the CCC in the 1930s. No historic objects or designed landscapes are in the project APE. The park is noted for the 1913 HCRH Latourell Bridge and for Latourell Falls	Retains integrity of location, design, setting, materials, workmanship feeling, association	Eligible/Contributing Overlook and parking lot (not in APE) are contributing resource to the HCRH National Historic Landmark District DOE and FOE preparation recommended for the park. The park may be eligible under "Oregon State Parks-Heritage Parks" Grouping Section 4(f): *de minimis* analysis recommended if federal funds used	
HR-3	**NE LATOURELL ROAD**	• Circa 1912-1913 Linear Resource • Utilitarian • Asphalt surface	Road alignment may date to The Dalles and Sandy Wagon Road (1872); re-surveyed in 1912 for improved access to the Columbia River Highway (1913-1915)	Retains integrity of location, design, setting	Not Eligible / Non-Contributing Does not embody distinctive characteristics of a type, period, or method of construction under Criterion C No Effect No further work recommended	

Latourell Road Stormwater Manhole Site Photo:

- The follow panoramic view of the site conditions along NE Latourell Road shows the colors at the site

- Grey cast iron will be compatible with the existing road surface which echoes the grey blue tones naturally present in the shadowed natural areas surrounding the road.

<u>Scenic Resources, Item 3</u>

Latourell Road Stormwater Manhole Material Reflectivity:

- See above information for material information. The grey cast iron is a low-reflective material and will be flush with the road surface. A slightly reflective appearance can occur when wet, but the road surface would be very difficult to see from any vantage point except for drivers on the road.